GENESIS SELECT WATER SYSTEMS MANUAL

OWNERS MANUAL



This valve is Tested and Certified by NSF International against NSF/ANSI Standard 44 for materials and structural integrity requirements

COMPONENT

REVISION # 1-Filter
REVISION DATE 4/1/2020

Free Manual PDF downloaded from: https://watersoftenerplus.com/manuals/_pdf//manual.pdf
Back to product page: https://watersoftenerplus.com

Genesis Select Water Systems Manual

Table of Contents

1. **Backwashing Filter Adder Sheet....4**
2. **Introduction....5**
3. **Product Features and Applications....6-7**
4. **Product Dimensions and Specifications....8-9**
5. **Pre-Installation Checklist....10-11**
6. **Valve Installation....12-14**
   a. Control Valve Installation....13
   b. System Sizing Chart....14
7. **Bypasses....15**
8. **Programming....16-20**
   a. Display and Instructions....16-18
   b. Programming....19-20
9. **System Installation....21-27**
   a. Plumbing Connections....21
   b. Drain Line Installation....21
   c. Brine Line and Brine Tank Installation....22-25
   d. System Start-Up....26
   e. Water Flow Diagrams....27
10. **Assembly Drawings and Parts List....28-29**
11. **Troubleshooting....30-32**
    a. Control Valve....30-31
    b. Electronics....32

Free Manual PDF downloaded from: https://watersoftenerplus.com/manuals/_pdf//manual.pdf
Back to product page: https://watersoftenerplus.com

Genesis Select Water Systems Manual

12. Accessories.....33

13. Packing List.....34-35

a. Valve.....35

b. System.....35

14. Warranty.....35-36

15. System Configuration and Settings.....37

16. Contact Information.....38

Free Manual PDF downloaded from: https://watersoftenerplus.com/manuals/_pdf//manual.pdf
Back to product page: https://watersoftenerplus.com

1. Backwashing Filter Adder Sheet

The included manual you received is for a Genesis water system that is utilized as a water softener or a backwashing filter. The control has been set to be used as a backwashing only filter system. Please utilize this adder sheet for proper setup of your backwashing system according to the type system you purchased using the selections below. Your system will not have a salt brine tank connection as it is not needed for your filter. Any reference to brine tank in the manual will not be used. The remaining plumbing and drain connections in the manual should be followed for proper install.

• **Catalytic Carbon** - Initial installation of your catalytic carbon filter will require you to install the control valve on top of the tank after removing the temporary shipping cap. Before installing the control it is ideal to position your filter tank near your installation point (typically before your water softener) and manually add water to the tank with a hose to pre-soak the carbon. Pre-soaking the carbon for up to 6 hours is suggested. After installation, backwashing or rinsing the system 2 or more times may be necessary to clear all of the carbon "fines" out to drain so that minimal discoloration of the service water occurs. Your system is pre-set to backwash at 1am every 4-5 days as suggested by the manufacturer.

• **pH Neutralizer** - Initial installation of your pH neutralizer filter will require you to install the control valve on top of the tank after removing the temporary shipping cap and adding all additional media sent with your system. Due to weight most pH neutralizer sizes are not shipped with all of the media added to the tank. If your system arrives with additional media a funnel and media fill instructions, please follow that media fill instruction sheet to add the remaining media. Our neutralizers contain 2 different medias and adding them in any order is acceptable. Your system is pre-set to backwash at 1am every 4-5 days as suggested by the manufacturer.

• **Birm or Katalox** - Initial installation of your Birm or Katalox filter will require you to install the control valve on top of the tank after removing the temporary shipping cap and adding any additional media sent with your system. Larger 1.5 cubic foot or 2 cubic foot systems do not ship pre-loaded due to weight and you will receive a funnel and media fill sheet if you need to add media shipped in a separate box. After installation, backwashing or rinsing the system 2 or more times may be necessary to clear all of the carbon "fines" out to drain so that minimal discoloration of the service water occurs. Your system is pre-set to backwash at 1am every 3 days as suggested by the manufacturer.

• **Eliminator Plus** - Initial installation of your Eliminator Plus filter will require you to install the control valve on top of the tank after removing the temporary shipping cap. Before installing the control it is ideal to position your filter tank near your installation point (typically before your water softener) and manually add water to the tank with a hose to pre-soak the media. Pre-soaking the media for up to 6 hours is suggested. After installation, backwashing or rinsing the system 2 or more times may be necessary to clear all of the media "fines" out to drain so that minimal discoloration of the service water occurs. You will also receive a solution tank with your system. The solution tank will include its own set of connection instructions to connect the solution tank to the control valve. Your system is pre-set to backwash and draw in the bleach solution at 1am every 3 days as suggested by the manufacturer. The solution tank will need regular refilling of the 14:1 water/ bleach solution by the user about every 5-6 weeks.

Free Manual PDF downloaded from: https://watersoftenerplus.com/manuals/_pdf//manual.pdf
Back to product page: https://watersoftenerplus.com

2. Introduction

Thank you for choosing a **Genesis Select Water System**. Genesis Select valves are designed with high flow rates to handle any residential or light commercial application. They feature innovative, patented ceramic discs for ultimate performance and reliability. The discs are abrasion and corrosion resistant, extending the life of the valve and significantly reducing maintenance costs.

Genesis Select valves have 7 advanced programming options with fully adjustable cycles to minimize water usage during regeneration. They utilize down-flow regeneration which efficiently washes the media, exchanging more grains per pound of salt. Genesis Select valves have signal output for external devices, program functions that remain in long term memory, and 72-hour memory backup should a power outage occur, giving you the confidence that your customers are receiving a cost-effective, high-quality water treatment solution.

Genesis Select valves have an interlock function to connect multiple valves in series or in parallel. There is an alternate interlock function, used with twin demand systems and 3-way ball valves to supply treated water 24/7. The Genesis Select's simple, yet powerful user interface has an easy to read LCD display and the valve offers remote handling to accept input from a PLC or computer. Advanced work modes are available with adjustable settings and three different cycle sequences to get the exact configuration needed for any job.

Genesis Select Valves Feature:

- Patented ceramic discs for longer life and reduced maintenance
- Highly configurable with easy to use program interface
- Long-term memory for program functions
- 72-hour memory backup
- 4 language options: English, Spanish, Chinese, French

Free Manual PDF downloaded from: https://watersoftenerplus.com/manuals/_pdf//manual.pdf
Back to product page: https://watersoftenerplus.com

3. Product Features and Applications

Primary Applications

Recommended for commercial and residential softening or demineralization water treatment systems.

- Softening System
- Iron Removal System
- Ion Exchange Equipment
- Boiler Softening Water Treatment
- RO Pre-treatment

Product Characteristics

Mechanical Components

The Genesis Select uses internal ceramic discs which are corrosion and abrasion resistant to form a hermetic seal. Rotation of the upper disc aligns to the corresponding lower disc ports for Service, Backwash, Brine & Slow Rinse, Brine Refill and Fast Rinse modes.

Hard Water/No Hard Water Bypass

Down-flow regeneration with no hard water and hard water bypass options. This valve operates as a hard water bypass.

Flow Rated: 18 gpm @ 15 psi drop.

365-Day Usage Memory

Manual / Delayed Regeneration

Pressing at any time results in an immediate manual regeneration.
Pressing and holding for 3 seconds, when system is locked, results in a delayed regeneration at the preselected time.

Extended Power Outage Indicator

If outage exceeds 3 days, the time of day indicator "" will flash 12:12. The current time of day needs to be re-set. All other set parameters remain stored in memory. The valve will resume to operate from the point of the power outage.

Three Regeneration Sequences

Lockout Function

Keypad will lock after 5 minutes without use. To access the parameter changes, press and hold and simultaneously for 3 seconds to unlock.

Free Manual PDF downloaded from: https://watersoftenerplus.com/manuals/_pdf//manual.pdf
Back to product page: https://watersoftenerplus.com

Genesis Select Water Systems Manual

LCD Display Screen

Advanced Valve and External Device Connections

- Interlock and Alternate Interlock
- Remote Handling
- Solenoid Valve

7 Regeneration Mode Options with Adjustable Cycle Times

Maximum Day Regeneration Interval

When the valve reaches the maximum programmed service days, without reaching the set service capacity, it will trigger a regeneration at the pre-programmed time of day. Regeneration(s) reset both the maximum day regeneration value and the service capacity value.

One Button to Change the Current Time

Pressing and holding the button for 3 seconds, when system is locked, allows the current time of day to be adjusted.

Service Alarm

When the service alarm feature counts-down and reaches set point, (Selectable 30 day min to 900 day max in 30 day increments) the alarm will activate at 8pm. The alarm will sound for 2 minutes and then shut off automatically. To silence alarm within the 2-minute period, press any button. A service call message will then appear on the screen as a signal for the homeowner to contact a water treatment professional for routine service. To eliminate this message from the screen, unlock the valve programming by pressing the UP and DOWN arrows simultaneously until the padlock in the upper left corner of the screen disappears (approximately 3 seconds). Next, enter the programming menu by pressing the MENU/CONFIRM button once and then pressing the BACK/REGENERATION button once. The system will then go back to normal status and the operational days will re-start new count-down. Note: The system will operate normally when it is displaying the service alarm message.

Free Manual PDF downloaded from: https://watersoftenerplus.com/manuals/_pdf//manual.pdf
Back to product page: https://watersoftenerplus.com

4. Product Dimensions and Specifications

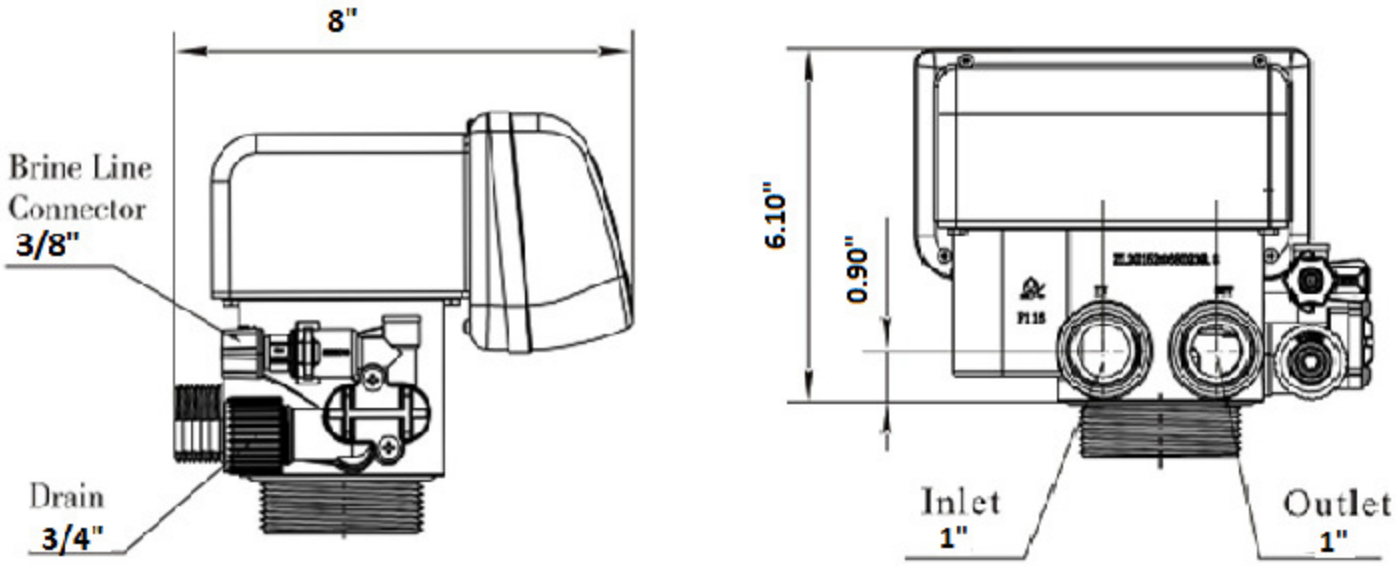

Length (max.)	Width (max.)	Height (max.)	Regeneration Mode
8"	8"	6.10"	Down-flow

These valve dimensions are for reference only.

Connect Port Dimensions							
Product Model	**Inlet Port**	**Outlet Port**	**Drain Port**	**Brine Port**	**Base**	**Riser Pipe**	**Hard Water Bypass**
Genesis-NHW	1" NPT	1" NPT	3/4" NPT	3/8"	2.5" 8NPSM	1.05"	No
Main Technical Parameters							
Water Capacity	See Performance Data Sheet						
Power Input	100-240VAC / 50-60Hz						
Power Output	12VDC / 2A						
Regeneration Cycles	Sequence 1: Service → Backwash → Brine & Slow Rinse → Fast Rinse → Brine Refill Sequence 2: Service → Backwash → Brine & Slow Rinse → Backwash → Fast Rinse → Brine Refill Sequence 3: Service → Brine Refill → Service (180 min-time fixed) → Backwash → Brine & Slow Rinse → Backwash → Fast Rinse						

Free Manual PDF downloaded from: https://watersoftenerplus.com/manuals/_pdf//manual.pdf
Back to product page: https://watersoftenerplus.com

Regeneration Mode	A-01 Meter Delay: Regeneration happens when the capacity reaches zero and the preset time of regeneration is reached. A-02 Meter Immediate: Regeneration happens when the capacity reaches zero. A-03 Intelligent Meter Delay (manufacturer default preset): The same delay function as A-01 but the capacity is determined by entering the total Resin Capacity, Feed Water Hardness, and the Number of People in the household. The control valve automatically calculates the gallons for regeneration. A-04 Intelligent Meter Immediate: The same function as A-02 but the capacity is determined by entering the Total Resin Capacity and Feed Water Hardness. The control valve automatically calculates the gallons for regeneration. A-05 Remaining Compare: Compares current usage with previous 365 day daily usage to intelligently determine when regeneration will occur. Regeneration starts at the set regeneration time. A-06 By Day (timer): Service days count down to zero (0) and regeneration starts at the set regeneration time. A-07 Filter: Filter mode, regeneration occurs when the capacity reaches zero and the preset time for regeneration is reached.

Free Manual PDF downloaded from: https://watersoftenerplus.com/manuals/_pdf//manual.pdf
Back to product page: https://watersoftenerplus.com

5. Pre-Installation Checklist

IMPORTANT NOTICE

Read through the instructions thoroughly and obtain all materials and tools before proceeding with the installation. Be sure to follow all applicable national, state, county and local plumbing codes and regulations.

All plumbing and electrical work should be performed by an accredited professional to ensure all local, state, and municipal guidelines are met.

During cold weather it is recommended that the installer warm the valve to room temperature before operating.

For outdoor installation ensure that system cannot freeze and is protected from direct sunlight and weather conditions including rain. Outdoor weather cover can be added for additional weather protection of the control valve. Warranty coverage does not include damage due to weather or acts of God.

Required Operating Conditions

Working Conditions	Working Pressure	20psi ～ 88psi
	Water Temperature	35 °F ～ 125 °F
Working Environment	Environment Temperature	35 °F ～ 125 °F
	Relative Humidity	≤95%
	Power Source	100-240VAC / 50-60Hz
Inlet Water Quality	Turbidity	＜5 FTU
	Hardness	20 grains per gallon
	Chlorine	＜0.1ppm
	$Iron^{2+}$	＜0.3ppm

CAUTION

Do not exceed 120 psi water pressure.
Do not exceed 35° C / 125° F water temperature.
Do not subject unit to freezing conditions.

Failure to use this product within the described conditions may void the warranty.

Free Manual PDF downloaded from: https://watersoftenerplus.com/manuals/_pdf//manual.pdf
Back to product page: https://watersoftenerplus.com

- Do not use the system with water that is microbiologically unsafe or of unknown quality without adequate disinfection before or after the system.

- Do not use the brine tube, injector body, or other connectors on the Genesis Select valve as a handle to carry the system.

- Ensure there is salt in the brine tank at all times when this valve is used for softening. The brine tank should contain clean water softening salt only, at least 99.5% pure. Only use clean water softener salt in pellet granular or block form.

- When there is moderate to high turbidity, a filter should be installed before the water softening system on the inlet side.

- If the water pressure exceeds 120psi, a pressure reducing valve must be installed before the water inlet. If the water pressure exceeds 80 psi, installing a pressure reducing valve before the water inlet is highly recommended. If the water pressure is under 20 psi, a booster pump must be installed before the water inlet.

- Replacement parts for the valve should only be purchased through Discount Water Softeners resellers. Electrical components, such as transformers, are specific to the Genesis Select valve from Discount Water Softeners.
- Regular interval monitoring of the water quality and work environment is recommended to ensure proper operation of the valve and system.

- Any modification to Discount Water Softeners equipment, which is outside the standard scope of supply, voids the product warranty.

- Discount Water Softeners equipment, like all modern electronic devices, can be damaged by electrical surges or brown outs. Every effort has been taken to harden the circuits, by design, to protect against such events. These precautions, or even additional surge protection, are not 100% effective. Therefore, equipment damage caused by abnormal electrical events is not covered by warranty.

Free Manual PDF downloaded from: https://watersoftenerplus.com/manuals/_pdf//manual.pdf
Back to product page: https://watersoftenerplus.com

6. Valve Installation

Unit Location

- The filter or softener should be located close to a floor drain away from direct sunlight and any heat sources.
- Protect equipment from direct sunlight and precipitation exposure.
- Install equipment in a location safe from unauthorized access or vandalism.
- Ensure that the unit is installed with enough space for operation and maintenance.
- The installation surface should be clean and level.
- Install the unit in an environment which minimizes consumer risk of loss in the event of malfunction.
- Discount Water Softeners offers many different products for many different applications, for both indoor and outdoor environments. If you are not 100% sure the equipment purchased is suitable for the installation application or environment, please check with a Hankscraft representative, or your local equipment provider, to ensure the proper equipment is selected. Equipment installed in inappropriate applications or environments are not covered by warranty.
- Brine tank should be located close to the control valve. Distance should not exceed 20 linear feet.

Plumbing and Mechanical Setup



If the water outlet or water tank is installed higher than control valve, or parallel interlock system with multi-outlets, a liquid level controller must be installed in the brine tank. If not, the water outlet or source tank will flow backwards into brine tank during backwashes.



If making a soldered copper installation, all sweat soldering should be done before connecting pipes to the valve. Torch heat will damage plastic parts.



When turning threaded pipe fittings onto plastic fitting, take precaution not to cross thread or over tighten.

Free Manual PDF downloaded from: https://watersoftenerplus.com/manuals/_pdf//manual.pdf
Back to product page: https://watersoftenerplus.com

Control Valve Installation

1. Remove the temporary shipping cap. The 32mm riser will come preinstalled in your tank. The appropriate amount of resin is factory installed in the tank up to 48,000 grain sizes. 64,000 grain and larger systems may have been partially loaded with resin and a media funnel and additional instruction provided to add the full amount of remaining resin. The actual resin in the tank may vary due to shipping conditions but the proper level will range from just above 1/2 to 2/3 full in the tank.
2. Install Valve Base O-ring around the neck of the valve.
3. Lubricate the center hub O-ring of the Genesis Select valve.
4. Install the top basket with a twist and lock action to center hub of the Genesis Select valve.
5. Do not use teflon tape or pipe sealant to attach control valve to tank.
6. Place Genesis Select valve onto tank with the distributor pipe inserted down the middle of the top basket. Rotate clockwise to secure onto the tank.

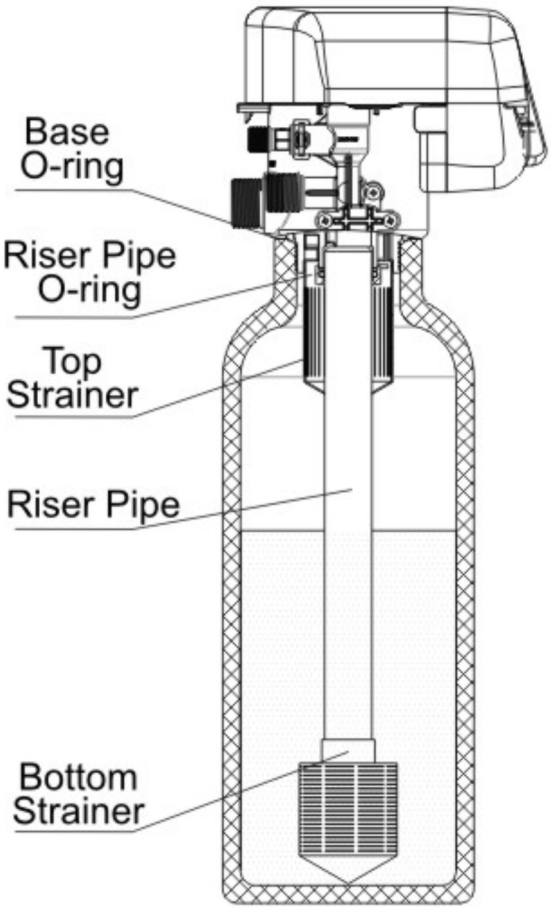

Figure 5-1

Do not overtighten! Overtightening may cause the valve to crack and void the warranty.

Free Manual PDF downloaded from: https://watersoftenerplus.com/manuals/_pdf//manual.pdf
Back to product page: https://watersoftenerplus.com

Genesis Select Water Systems Manual

System Sizing Chart

Tank Size	Resin Volume cu. ft.	Total System Grains	Salt Setting	Injector Part No.	Color	DLFC	Part No.	Color	BLFC	Part No.	Color
9x48	1	17,682	Low	6302	Black	2.02	8468060	White	0.3	8468056	White
9x48	1	23,196	Standard	6302	Black	2.02	8468060	White	0.3	8468056	White
9x48	1	28,254	High	6302	Black	2.02	8468060	White	0.3	8468056	White
10x44	1.25	22,102	Low	6302	Red	2.86	8468061	Black	0.39	8468052	Brown
10x44	1.25	28,995	Standard	6302	Red	2.86	8468061	Black	0.39	8468052	Brown
10x44	1.25	35,317	High	6302	Red	2.86	8468061	Black	0.39	8468052	Brown
10x54	1.5	26,523	Low	6302	Red	2.86	8468061	Black	0.39	8468052	Brown
10x54	1.5	34,794	Standard	6302	Red	2.86	8468061	Black	0.39	8468052	Brown
10x54	1.5	42,381	High	6302	Red	2.86	8468061	Black	0.39	8468052	Brown
12x52	2	35,364	Low	6303	Green	4.22	8468045	Blue	0.39	8468053	Pink
12x52	2	46,392	Standard	6303	Green	4.22	8468045	Blue	0.39	8468053	Pink
12x52	2	56,508	High	6303	Green	4.22	8468045	Blue	0.39	8468053	Pink

Free Manual PDF downloaded from: https://watersoftenerplus.com/manuals/_pdf//manual.pdf
Back to product page: https://watersoftenerplus.com

7. Bypasses

Ceramic Bypass

Before attaching the bypass to the valve, verify the meter is installed into the outlet side of the bypass with the impeller facing in.

- As Figure 5-2 shows; install the seals into the animated connector.
- Attach animated connectors to the inlet/outlet and grease the O-rings.
- Attach the bypass valve and insert the clips.
- Meter cable is installed into cable port on outlet side during system start-up.

Ceramic Bypass

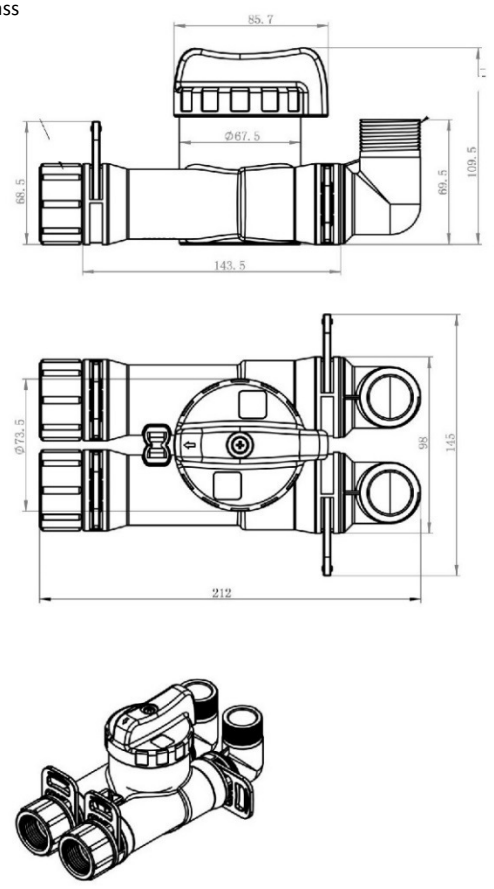

Ceramic Bypass

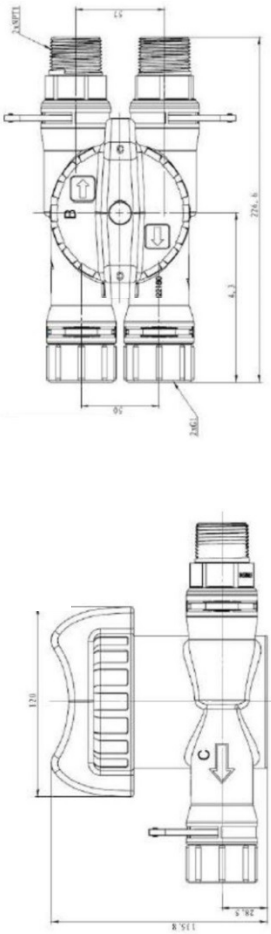

Free Manual PDF downloaded from: https://watersoftenerplus.com/manuals/_pdf//manual.pdf
Back to product page: https://watersoftenerplus.com

8. Programming: Display and Instructions

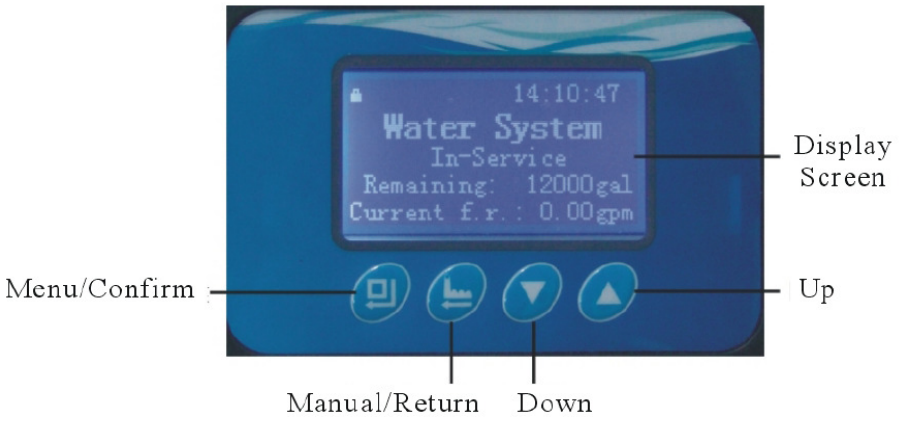

Manual / Delayed Regeneration

1. Pressing at any time results in an immediate manual regeneration.
2. Pressing and holding for 3 seconds, when system is locked, results in a delayed regeneration at the preselected time.

One Button to Change the Current Time

Pressing and holding the button for 3 seconds, when system is locked, allows the current time of day to be adjusted.

Unlocking the Keypad

The icon indicates the buttons are locked within 5 minutes of idle use. To unlock press and hold and for 3 seconds until the icon is off.

Free Manual PDF downloaded from: https://watersoftenerplus.com/manuals/_pdf//manual.pdf
Back to product page: https://watersoftenerplus.com

Enter Key 

Press button to enter the basic programming mode, modify highlighted options, and return to the main menu.

Manual Regen/Esc. Key 

Press at any phase during manual regeneration to advance to the next phase or press during programming to exit to the home screen without modifying the current highlighted option.

Up and Down Arrows 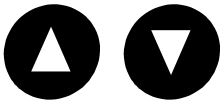

and buttons are used to scroll through the various basic programming options as well as adjust values.

Basic Programming

Allows you to adjust the time values for each phase. To enter basic programming, follow the directions below.

1. When the icon is on, press and hold both and for 3 seconds to unlock the keypad.
2. Press to enter the main menu; press or to highlight each option.
3. Press to enter highlighted option.
4. Press or to adjust the value.
5. Press to accept changes.
6. Press to exit back to service status.

Advanced Programming

Allows you to set the Regen Cycle and Regen Mode that will work best for your customer; as well as adjust or set each phase time. To enter advanced programming, follow the directions below.

Free Manual PDF downloaded from: https://watersoftenerplus.com/manuals/_pdf//manual.pdf
Back to product page: https://watersoftenerplus.com

Genesis Select Water Systems Manual

1. Plug in the Genesis Select Immediately press in sequence to enter into the advanced setting.
2. Press or to select the menu item to be changed.
3. Press to return to the previous menu.

If valve locks while programming, unplug power supply and repeat step above.

4. Press to enter the main menu; press or to highlight each option.
5. Press to enter highlighted option.
6. Press or to adjust the value.
7. Press to accept changes.
8. Press to advance to service status.

Free Manual PDF downloaded from: https://watersoftenerplus.com/manuals/_pdf//manual.pdf
Back to product page: https://watersoftenerplus.com

Programming: Modes A-03

Parameter	Unit	Default	Description
Review Company Info			Displays current programmed company information.
Language *		English	
Set Company Info *			Set company information for display. Three lines available for input
Set Time of Day	24-hr. Clock		Set current time of day. 24-hour clock format.
Set Date			Set current month, day, and year. XX/XX/20XX
Set Program Type * Interlock / Alternate Interlock		Interlock	Used as a stand-alone installation and twin demand in conjunction with No Hard Water version of the Genesis Select
Set Regen Cycles *	1, 2, 3	1	Recommended setting to Sequence 1. See Pages 7-8. Service → Backwash → Brine & Slow Rinse → Fast Rinse → Brine Refill.
Set Clear Data *	Close/Open	Close	Skip during initial set-up. Clears all stored memory and restores default settings. Close = Data saved Open = Reset data
Set Regen Mode: A-01-A-07 *		A-03	A-03 Intelligent Meter Delayed.
Set Total Capacity	Grains		Preset for you by dealer.
Set Water Hardness	Grains per Gallon (gpg)	10	Total water hardness of incoming water supply. Amount varies per location. It is highly recommended to have tested for correct function/performance.
Set Number of People		4	The number of people in the residence
Set Regen Time	24-hr. Clock	02:00	The time of day the system will regenerate when it reaches system capacity.
Set Backwash Time	Min.	10	Set to 0 (zero) when using Sequence 2 as a softener install.
Set B.S.R. Time	Min.	60	Brine Slow Rinse Stage of Regeneration.
Set Fast Rinse Time	Min.	10	
Set B.R. Time (Brine Refill)	Min:Sec	5	Refill time is calculated and set by your dealer for standard efficiency. Do not change unless consulting with your dealer.
Max Days for Regeneration	Days	14	A regeneration is forced every 14 days if no water has been used.
Signal Output Mode b-01 (02) *		b-01	Used for external device. b-01. Disregard for standard installation.
Set Service Alarm *	Days	Disable	Alarm rings to prompt a service call. Occurs at the number of days set at 8pm for 2 minutes. Display changes to prompt the homeowner to call their dealer.
Daily Usage Log	Gal.		Shows the gallons used each day for the last 7 days.
Daily Peak Usage	Gal.		Shows the highest gallon usage day for the last 7 days.
Weekly Usage Log	Gal.		Shows the gallons used each week for the last 52 weeks.
Weekly Peak Usage	Gal.		Shows the highest gallon usage week for the last 52 weeks.
Monthly Usage Log	Gal.		Shows the gallons used each month for the last 12 months.
Monthly Peak Usage	Gal.		Shows the highest gallon usage month for the last 12 months.
Review Regen Times			Displays the number of times the valve has regenerated independently.
Review Software Ver.			Shows current software version of Genesis Select valve.

Above parameters are located in standard program settings menu. *(*) Denotes parameters located in advanced program settings menu.*

Free Manual PDF downloaded from: https://watersoftenerplus.com/manuals/_pdf//manual.pdf
Back to product page: https://watersoftenerplus.com

Programming: Filter Mode

Parameter	Unit	Default	Description
Review Company Info			Displays current programmed company information.
Language *		English	
Set Company Info *			Set company information for display. Three lines available for input
Set Time of Day	24-hr. Clock		Set current time of day. 24-hour clock format.
Set Date			Set current month, day, and year. XX/XX/20XX
Set Regen Mode: A-07 *		A-03	A-07 Filter
Set Rinse Frequency	F	F-00	Set the number of additional rinses (backwashes) preferred.
Set Regen Time	24-hr. Clock	02:00	The time of day the system will regenerate when it reaches system capacity.
Set Backwash Time	Min.	10	Preset for you by dealer.
Set Fast Rinse Time	Min.	10	Preset for you by dealer.
Max Days for Regeneration	Days	30	Preset for you by dealer.
Signal Output Mode b-01 (02) *		b-01	Used for external device. b-01. Disregard for standard installation.
Set Service Alarm *	Days	Disable	Alarm rings to prompt a service call. Occurs at the number of days set at 8pm for 2 minutes. Display changes to prompt the homeowner to call their dealer.
Daily Usage Log	Gal.		Shows the gallons used each day for the last 7 days.
Daily Peak Usage	Gal.		Shows the highest gallon usage day for the last 7 days.
Weekly Usage Log	Gal.		Shows the gallons used each week for the last 52 weeks.
Weekly Peak Usage	Gal.		Shows the highest gallon usage week for the last 52 weeks.
Monthly Usage Log	Gal.		Shows the gallons used each month for the last 12 months.
Monthly Peak Usage	Gal.		Shows the highest gallon usage month for the last 12 months.
Review Regen Times			Displays the number of times the valve has regenerated independently.
Review Software Ver.			Shows current software version of Genesis Select valve.

Above parameters are located in standard program settings menu. *(*) Denotes parameters located in advanced program settings menu.*

Backwash time and rinse frequency is dependent on media and application.

Free Manual PDF downloaded from: https://watersoftenerplus.com/manuals/_pdf//manual.pdf
Back to product page: https://watersoftenerplus.com

9. System Installation

Valve Set-up and Installation - See Page 12-14.

Plumbing Connections

As Figure 9-1 shows; connect inlet pipe, via a 1" NPT female connector, to the inlet connector of bypass. Repeat steps for the outlet pipe.

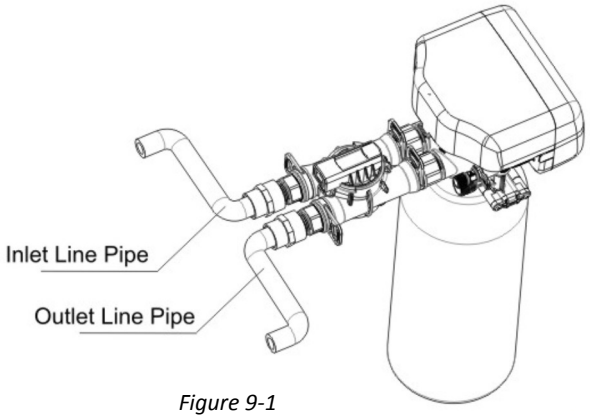

Figure 9-1

Drain Line Installation

As Figure 9-2 shows; insert drain line with an air gap to the floor drain. Valve drain hose not supplied.

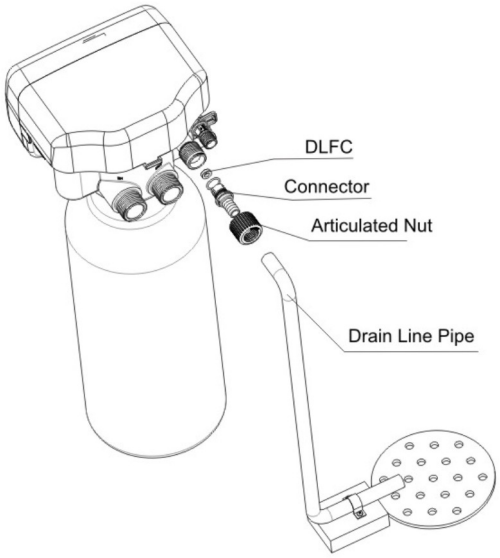

Figure 9-2

CAUTION

An air gap is required between the drain line and the drain (sewer). This avoids a syphon effect and reverse contamination.

Free Manual PDF downloaded from: https://watersoftenerplus.com/manuals/_pdf//manual.pdf
Back to product page: https://watersoftenerplus.com

Brine Line Connection

1. As Figure 9-3 shows; slide brine nut onto the 3/8" brine tubing.

2. Install the filter screen into the ferrule and insert the ferrule into the end of brine tube.

3. Insert tube into brine connector and tighten brine nut to the brine connector.

4. Only use stiff walled poly tubing. Drain distance above softener control should not exceed 20 feet. If distance is greater than 20ft above control valve larger (1") pipe diameter should be used. Brine Tank Installation (also see adder assembly sheet).

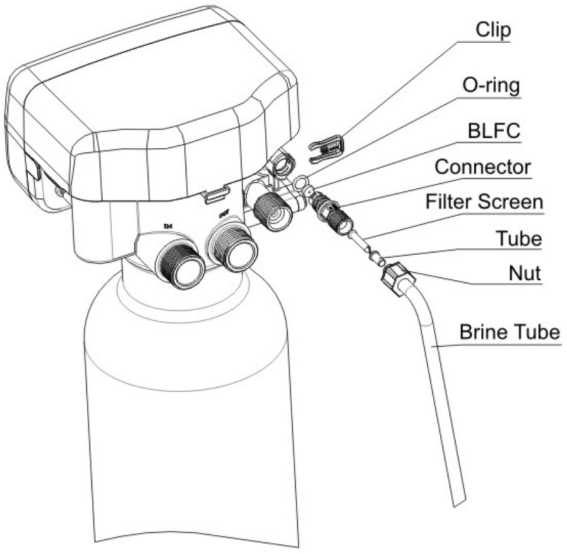

Figure 9-3

Brine Tank Installation (design and assembly may vary)

1. Unpack brine tank components

    - Brine tank standoff with nut and washer
    - Overflow elbow with nut and washer
    - Optional quick connect clips







2. Open brine well and remove float. Ensure the inside of the tank and brine well are free of debris.

Free Manual PDF downloaded from: https://watersoftenerplus.com/manuals/_pdf//manual.pdf
Back to product page: https://watersoftenerplus.com

3. Assemble salt grid (4 feet, 1 base). Feet clip into the bottom of the base.

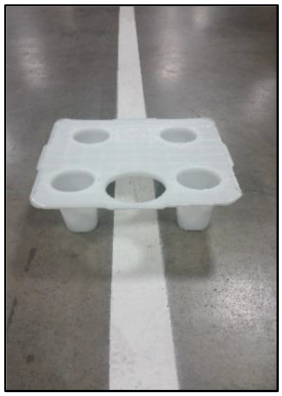

4. Insert assembled salt grid into brine tank by lining up the cut out hole with the drilled holes on the brine tank.

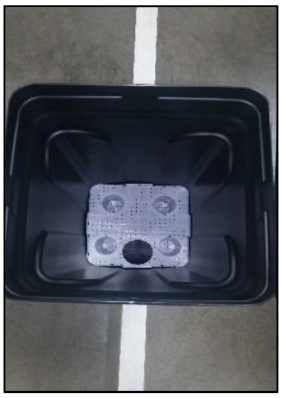

5. Insert the brine well, making sure the bottom brine well cap is attached. Insert the float assembly by lining up the top cut out holes.

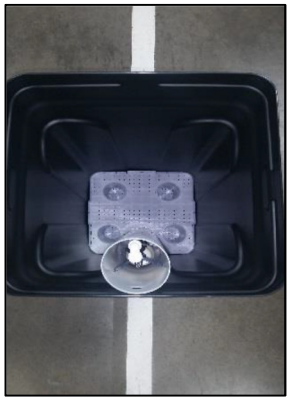

Free Manual PDF downloaded from: https://watersoftenerplus.com/manuals/_pdf//manual.pdf
Back to product page: https://watersoftenerplus.com

6. Install brine tank standoff over the float assembly and insert into top cut out hole. Attach washer on outside of tank and secure unit.



7. Insert brine line into the top cut out hole, through the standoff, and into the quick connect elbow (optional: attach blue clips). Press firmly to make sure brine line is fully inserted into the quick connect. If your elbow connection has a compression connection, unscrew the compression nut while pushing the brine tubing into the fitting. Once loose enough the tubing will slide all the way into the elbow. Once inserted completely, tighten down compression nut.



8. Install overflow elbow fitting with washer on the outside of tank. Fasten nut on the inside of the tank.



Free Manual PDF downloaded from: https://watersoftenerplus.com/manuals/_pdf//manual.pdf
Back to product page: https://watersoftenerplus.com

9. Replace brine well lid.



10. Replace brine tank lid.



Free Manual PDF downloaded from: https://watersoftenerplus.com/manuals/_pdf//manual.pdf
Back to product page: https://watersoftenerplus.com

System Start-Up

1. Before running the Genesis 2 Upflow for the first time, you will need to make sure all connections are tight and there are no leaks.
2. Only turn your water back on with your bypass initially closed with the bypass handle in the closed position.
3. Ensure that your meter cable is plugged into the “D” shaped opening on the outlet side of the bypass between the bypass handle and control valve.
4. Your bypass assembly ships enclosed in shrink wrapped to ensure that the turbine meter impeller remains installed on the outlet (left) side of the assembly. Be sure the meter turbine remains installed in the outlet side of your bypass.
5. When initially allowing water into the control valve and resin tank be sure to slowly open the bypass 1/4 of the way open to ensure that the resin does not lift up from a sudden rush of water.
6. After the tank stops filling you can open the bypass to the full open position.
7. Next the resin should be rinsed to properly clear the tank of any resin “fines” or discolored water. To do this you will need to push the regeneration button to advance the control to Brine Draw/Rinse. Once the Brine Draw/Rinse stage starts counting down again push the regeneration button and the system will advance to the Backwash or Rinse stage depending on your model. Once the backwash or rinse stage starts allow the system to run water to the drain until any remaining trapped air and discolored water discharges until clear.
8. Once the water running to drain runs clear. Advance the control to the Brine Refill stage. After the Brine Refill stage starts counting down advance the control one more time and the system will go back to the normal service position.
9. Turn a faucet on, away from the installation location, until the air from the plumbing lines has been purged.
10. Prior to fully starting up of your system. Please manually add 5 gallons of water to the brine tank.
11. Next add in 40lbs of water softener salt to the brine tank.
12. Allow at least 6 hours for water to dissolve salt. After 6 hours perform a manual regeneration.
13. After regeneration is complete your water softener system is now fully operational.

When you press the screen will display “motor running” as it positions the ceramic disc. Once “motor running” disappears and the next phase is displayed, press to advance to the next phase.

Free Manual PDF downloaded from: https://watersoftenerplus.com/manuals/_pdf//manual.pdf
Back to product page: https://watersoftenerplus.com

Water Flow Diagrams

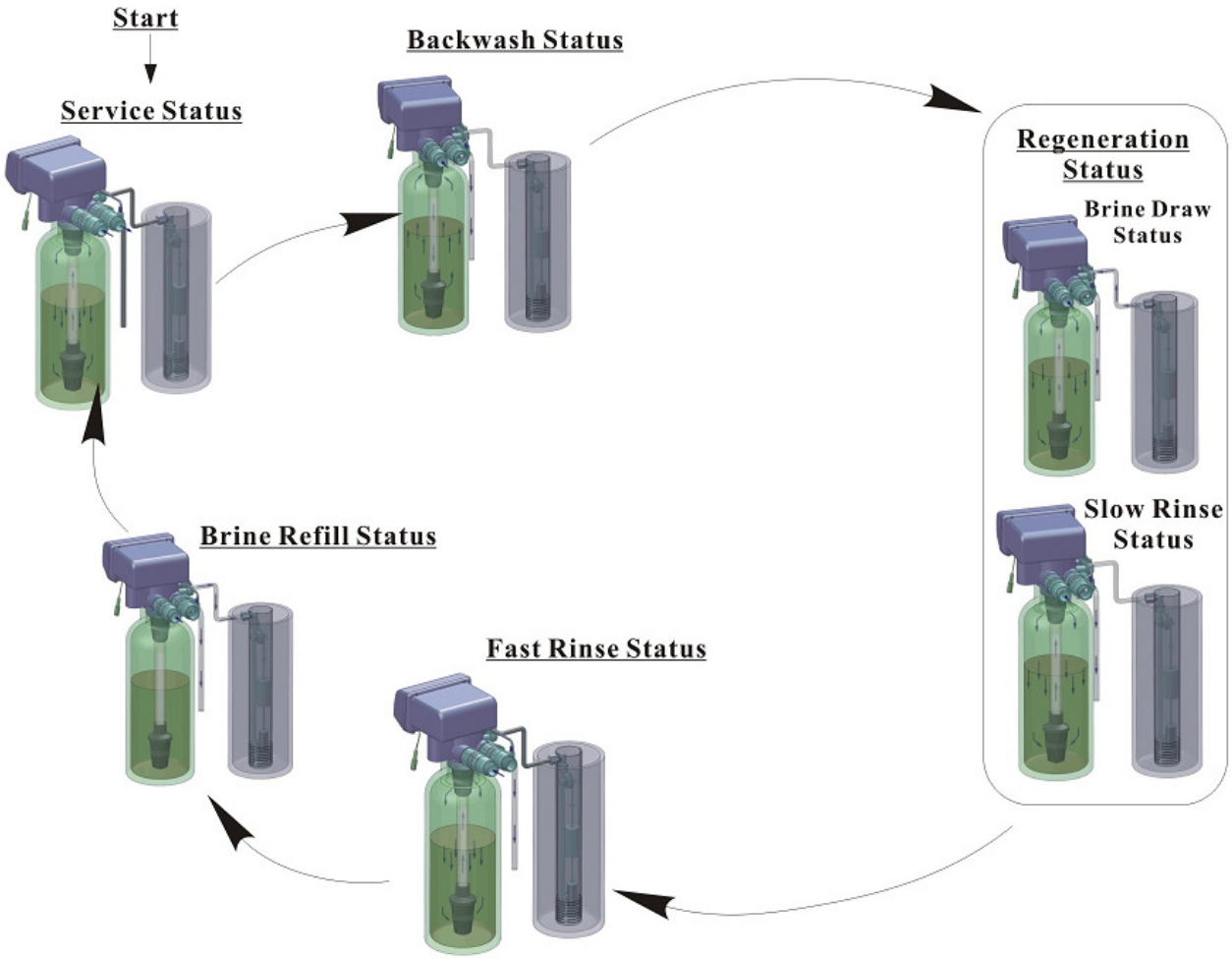

Free Manual PDF downloaded from: https://watersoftenerplus.com/manuals/_pdf//manual.pdf
Back to product page: https://watersoftenerplus.com

10. Assembly Drawings and Parts List

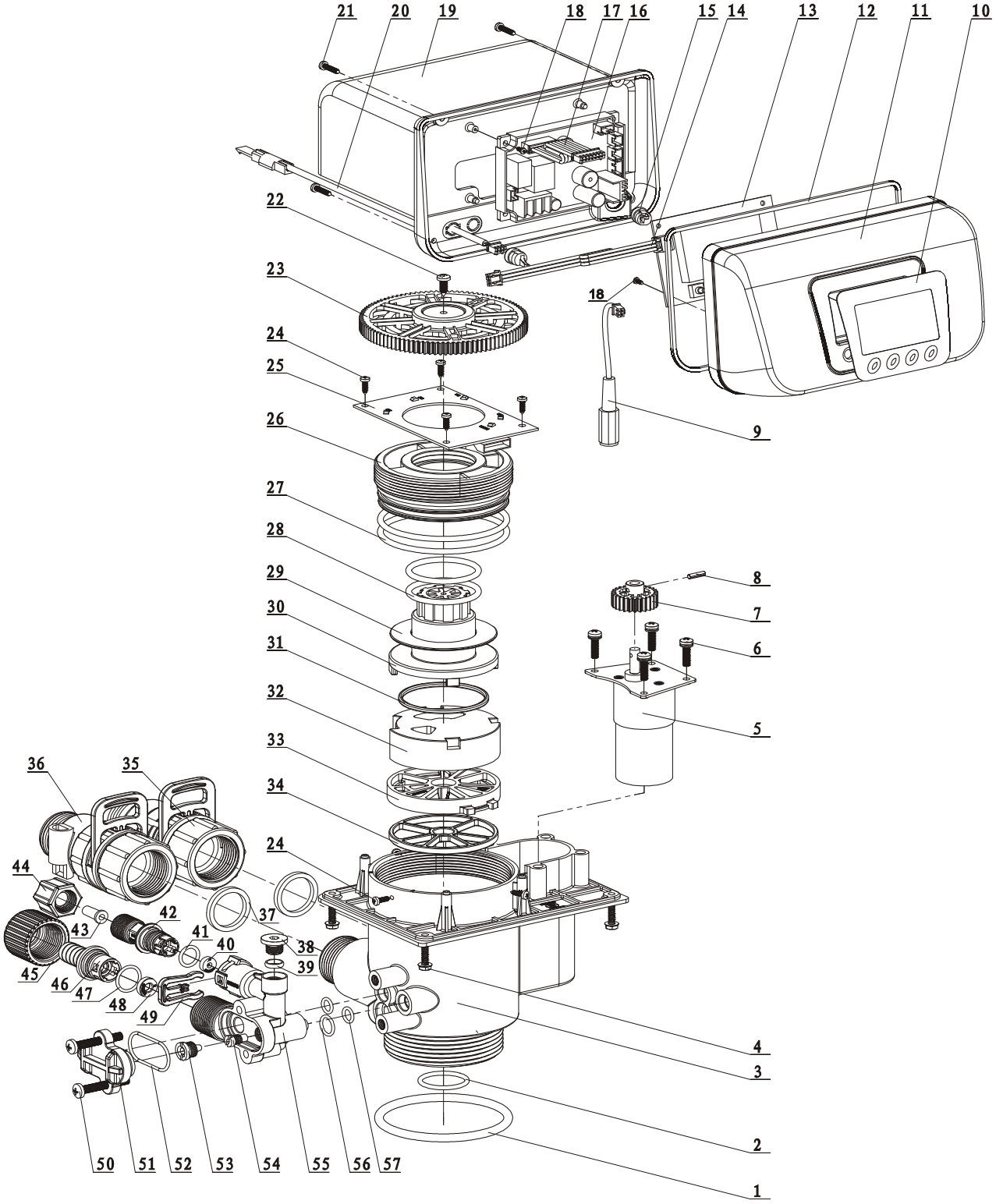

Free Manual PDF downloaded from: https://watersoftenerplus.com/manuals/_pdf//manual.pdf
Back to product page: https://watersoftenerplus.com

Parts List

Item No.	Description	Part No.	Qty.		Item No.	Description	Part No.	Qty.
1	O-ring 73×5.3	8378143	1		30	Shaft	8258004	1
2	O-ring 25.8×2.65	8378078	1		31	Moving Seal Ring	8370001	1
3	Valve Body (ABS+GF10)	5002104	1		32	Moving Disc	8459078	1
	Valve Body (PPO+GF20)	5022105			33	Fixed Disc	8469079	1
4	Screw, Cross ST3.9×16	8909016	4		34	Seal Ring	8216004	1
5	Motor	6158073	1		35	Animated Connector	5457002	2
6	Screw, Cross M4×16	8902006	4		36	Flow Meter	5447018	1
7	Small Gear, Motor	8241003	1		37	Seal Ring	8371001	2
8	Pin	8993003	1		38	Plug	8323002	1
9	Wire for Power	5513001	1		39	Seal Ring	8370012	1
10	Label	8865002	1		40	Brine Line Flow Control	8468055	1
11	Front Cover	8300001	1		41	O-ring 11×2	8378169	1
12	Seal Ring	8371003	1		42	Connector	8458069	1
13	Display Board	6381003	1		43	Tube	8457004	1
14	Wire for Display Board	5512001	1		44	Hexagonal Nut	8940001	1
15	Cable Clip	8126004	2		45	Animated Nut	8945025	1
16	Control Board	6382113	1		46	Connector	8458064	1
17	Wire for Locating Board	5511001	1		47	O-ring 15×1.8	8378179	1
18	Screw, Cross ST2.2×6.5	8909004	4		48	Drain Line Flow Control	8438054	1
19	Dust Cover	8005006	1		49	Clip	8270010	1
20	Probe Wire	6386014	1		50	Screw, Cross M5×35	8902017	2
21	Screw, Cross ST2.9×16	8909010	4		51	Cover, Injector	8315001	1
22	Screw, Cross ST3.9×13	8909013	1		52	O-ring 30×1.8	8378025	1
23	Big Gear, Driven	5241023	1		53	Nozzle, Injector	8454009	1
24	Screw, Cross ST2.9×9.5	8909008	7		54	Throat, Injector	8467009	1
25	Locating Board	6380044	1		55	Injector Body	8008010	1
26	Fitting Nut	8092004	1		56	O-ring 10.82×1.78	8378012	1
27	O-ring 73×3.55	8378128	2		57	O-ring 7.5×1.8	8378016	2
28	O-ring 38.7×3.55	8378184	2					
29	Anti-friction Washer	8216004	1					

Free Manual PDF downloaded from: https://watersoftenerplus.com/manuals/_pdf//manual.pdf
Back to product page: https://watersoftenerplus.com

11. Troubleshooting

Control Valve

Problem	Cause	Correction
1. Softener fails to regenerate	A. Electrical service to unit has been interrupted. B. Regeneration cycles set incorrectly. C. Controller is defective. D. Motor failure.	A. Check for consistent electrical service. B. Reset regeneration cycles. C. Replace controller. D. Replace motor.
2. Regeneration time is not correct	A. Time of Day not set correctly. B. Power failure over 3 days.	Check program and reset time of day.
3. Hard water	A. Bypass valve is open or leaking. B. No salt in brine tank. C. Injector plugged. D. Insufficient water level in brine tank. E. Leak at O-ring on riser pipe. F. Internal valve leak. G. Regeneration cycles not correct. H. Shortage of resin. I. Bad quality of feed water or meter blocked.	A. Close or repair bypass valve. B. Add salt to brine tank and maintain salt level above water level. C. Change or clean injector. D. Check brine tank refill time. E. Make sure riser pipe is not cracked. Check O-ring and tube pilot. F. Change valve body. G. Set correct regeneration cycles in the program. H. Add resin to mineral tank and check for leaks. I. Reduce the inlet turbidity, clean or replace meter.
4. Softener fails to draw brine	A. Line pressure is too low. B. Brine line is plugged. C. Brine line is leaking. D. Injector is plugged. E. Internal leakage. F. Drain line is plugged. G. Wrong size BLFC, DLFC and injector.	A. Increase line pressure. B. Clean brine line. C. Replace brine line. D. Clean or replace injector. E. Replace valve body. F. Clean drain line flow control. G. Install properly sized BLFC, DLFC and injector. See Page 13.
5. Unit uses too much salt	A. Improper salt setting. (Brine refill time) B. Excessive water in brine tank.	A. Check salt usage and salt setting. (Brine refill time) B. See problem no.6.
6. Excessive water in brine tank	A. Brine refill time is too long. B. Foreign material in brine line. C. Foreign material in brine valve or plugged drain line flow control. D. Power outage during brine fill. E. Safety valve in brine tank malfunction.	A. Reset correct refilling time. B. Clean brine line. C. Clean brine valve, and DLFC. D. Put the valve in bypass. Install a safety float in brine tank. E. Repair or replace brine safety valve.

Free Manual PDF downloaded from: https://watersoftenerplus.com/manuals/_pdf//manual.pdf
Back to product page: https://watersoftenerplus.com

7. Pressure lost or iron in conditioned water	A. Iron in the water supply pipes. B. Iron mass in the softener. C. Fouled resin bed. D. Too much iron in the raw water.	A. Clean the water supply pipe. B. Clean valve and add resin cleaning chemical, increase frequency of regeneration. C. Check backwash, brine draw and brine refill. Increase frequency of regeneration and backwash time. D. Install Iron removal equipment before softening.
8. Loss of mineral through drain line	A. Air in water system. B. Bottom strainer broken. C. Improperly sized drain line control (DLFC).	A. Assure that well system has proper air eliminator control. B. Replace bottom strainer. C. Check for proper drain rate.
9. Control cycles continuously	A. Signal to the locating PCB is interrupted. B. Controller is faulty. C. Foreign material in the drive gear. D. Time of regeneration steps were set to zero.	A. Check the connection between the main PCB to the locating PCB. B. Replace controller. C. Remove blockage in drive gear. D. Check program setting and reset.
10. Drain flows continuously	A. Internal valve leak. B. Interrupted power supply during backwash.	A. Check and repair valve body or replace it. B. Adjust valve to service position or turn off bypass valve and restart when power is restored.
11. Interrupted or irregular brine	A. Water pressure too low or not stable. B. Injector is plugged or faulty. C. Air in resin tank.	A. Increase water pressure. B. Clean or replace injector. C. Check and find the reason.
12. Water flows from drain or brine line after regeneration	A. Foreign material in the valve body. B. Hard water mixed in valve body. C. Water pressure is too high.	A. Clean foreign material in valve body. B. Change valve core or sealing ring. C. Reduce water pressure or use pressure release function.
13. High concentration of brine	A. Foreign material in injector. B. Brine valve cannot be shut-off. C. Rapid rinse time is too short.	A. Clean and repair injector. B. Replace brine valve or clean it. C. Extend rapid rinse time.
14. Decreased Capacity	A. Regeneration is not occurring. B. Fouled resin bed. C. Safety float is not at the proper height or brine time is low. D. Softener setting not proper. E. Raw water quality has altered. F. Flow meter is slow or stationary.	A. Reset regeneration parameters. B. Increase backwash flow rate and time, clean or change resin. C. Adjust brine draw time and float height. D. Re-test the water and change the valve parameters. E. Regenerate unit manually then reset regeneration cycle. F. Disassemble and clean flow meter or replace.
15. Power Outage Occurs During Regeneration	A. System locked in current phase/cycle.	A. Close the bypass until power resumes. If power outage lasts over 72 hours, the time of day will need to be reset.

Free Manual PDF downloaded from: https://watersoftenerplus.com/manuals/_pdf//manual.pdf
Back to product page: https://watersoftenerplus.com

Electronics

Problem	Cause	Correction
1. Abnormal display	A. Wiring to the front panel is loose. B. Control board is faulty. C. Transformer malfunction. D. Electrical service unstable.	A. Check and replace the wiring. B. Replace control board. C. Check and replace transformer. D. Verify power source.
2. Blank display	A. Wiring to the front panel is loose. B. Front panel damaged. C. Control board damaged. D. Electricity is interrupted.	A. Check and replace wiring. B. Replace front panel. C. Replace control board. D. Check power source.
3. E1 code	A. Wiring of locating board with controller fails to work. B. Locating board damaged. C. Mechanical drive failure. D. Faulty control board. E. Wiring to the motor has a short. F. Motor damaged.	A. Replace wiring. B. Replace locating board. C. Replace Discs or drive gear. D. Replace control board. E. Replace wiring. F. Replace motor.
4. E2 code	A. Hall effect on locating board damaged. B. Possible short in the wiring to the locating board. C. Control board malfunction.	A. Replace locating board. B. Replace wiring. C. Replace control board.
5. E3 or E4 code	A. Control board malfunction.	A. Replace control board.

Free Manual PDF downloaded from: https://watersoftenerplus.com/manuals/_pdf//manual.pdf
Back to product page: https://watersoftenerplus.com

12. Accessories

Description	Part Number	Figure	Quantity
1" Inlet/Outlet Female to Female Adaptor	REVV-208		1
¾" 90 º Inlet/Outlet Elbow	REVV-209		1
1" 90 º Inlet/Outlet Elbow	REVV-210		1
¾" Male Adaptor	REVV-211		1
¾" Electronic 2-Way Ball Valve	F93-B		1
1" Electronic 2-Way Ball Valve	F93-C		1
1.5" Electronic 2-Way Ball Valve	F93-D		1
2" Electronic 2-Way Ball Valve	F93-E		1
1" Ceramic Tee 3-Way Ball Valve	F94-C		1

Free Manual PDF downloaded from: https://watersoftenerplus.com/manuals/_pdf//manual.pdf
Back to product page: https://watersoftenerplus.com

13. Packing List

Valve Packing List

Description	Part Number	Figure	Qty.
Control Valve			1
12VDC Transformer	6379021		1
User Manual			1
Parts			
Valve Base O-ring	8378143		1
Interlock Cable	5515002		1
Washers	8371001		2
Filter Screen & Bushing	REVV-218		1 Set
Injector Cover O-ring	8378148		2
3/8” Brine Nut	8940001	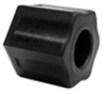	1
Injector and Button Kit – REVV-215			
Injector Nozzle & Throat	6306, 6308, 6309		1 Set
Drain Line Flow Controls	468077, 468062		1 Set
Brine Line Flow Controls	8468076, 8468075, 8468057, 8468056, 8468052, 8468053, 8468054, 8468055		1 Set

Free Manual PDF downloaded from: https://watersoftenerplus.com/manuals/_pdf//manual.pdf
Back to product page: https://watersoftenerplus.com

System Packing List

Description	Part Number	Qty.
Genesis Select Control Valve	72605-HK, 72605B-HK	1
1” Push Pull Bypass	41204	1
Pressure Tank and Media (media may be installed in tank or bulk separate)	Varies	1
Distributor Tube and Lower Basket (installed in pressure tank)	REVV-PTT10-66	1
Upper Basket	REVV-213	1
Brine Tank and Float Assembly	Varies	1
3/8” Brine Line	BL3/8	4'
Grease Packet	SG-3005	1
Customer Manual	---	1
Tank Label (elements systems only)	PTL-01	1
Warranty Card	---	1

14. Discount Water Softeners Warranty Statement

LIMITED WARRANTY

As described herein, Discount Water Softeners, Inc. warrants its products are free from defects in material and workmanship only, when properly installed, operated, and maintained. This warranty is subject to the exceptions herein.

Discount Water Softeners, Inc. warrants to the original owner that the items listed below, excluding but not limited to wear parts like O-rings, gaskets and seals, will be free from defects in materials and workmanship for the period of time specified below from the original purchase date.

Product or Component	Warranty Period
Control Valves	Lifetime Warranty
Storage Tanks	Lifetime Warranty
Media Tanks	Lifetime Warranty
Any Other Components	One (1) Year
Ceramic Discs for Rotary Valves	Lifetime
RO and UF Filter Systems	One (1) Year

Free Manual PDF downloaded from: https://watersoftenerplus.com/manuals/_pdf//manual.pdf
Back to product page: https://watersoftenerplus.com

Any parts used for replacement are warrantied for the remainder of the original warranty period applicable to the part from the date of manufacture so long as the parts are installed by a Discount Water Softeners, Inc. factory trained and authorized installer.

Discount Water Softeners, Inc. obligation by this Limited Warranty, at is option, is to repair or replace any warrantied product only. Labor for repair or replacement is not included as part of this warranty. Prior to returning the product to Discount Water Softeners, Inc. a valid return materials authorization number must be obtained from Discount Water Softeners, Inc. Any product returned to Discount Water Softeners, Inc. without a valid return authorization number will be rejected. Any product found to be defective will, at the sole discretion of Discount Water Softeners, Inc. be repaired or replaced. Discount Water Softeners, Inc. is not responsible for shipping cost to the repair facility. This section lists the sole remedies for any valid warranty claim.

This warranty does not apply to defects reported to Discount Water Softeners, Inc. outside of the warranty period.

This warranty does not apply to defects caused by installing, operating, servicing, modifying, repairing or maintaining (or lack of maintaining) the product outside of Discount Water Softeners, Inc. recommendations. Filters, membrane elements and flow restrictors that become fouled or plugged due to excessive turbidity, dissolved solids, or microorganisms are not covered by this warranty. This warranty does not apply to defects caused by damage during shipment, neglect, misuse, modification, accident, noncompliance with local codes and ordinances, hot water, frozen water, sediment, corrosive liquids, gases, chemicals, bacteria, animals, sand, salt, flood, wind, fire, outdoor installations where the product is not reasonably covered, pneumatic use, natural disasters, war, terrorism or acts of God. No other person is authorized to make any other warranty on behalf of Discount Water Softeners, Inc. either during or after the applicable warranty period.

Discount Water Softeners, Inc. assumes no liability for determining the proper products and equipment or installation necessary to meet the requirements of the user of the product, and Discount Water Softeners, Inc. does not authorize others to assume such liability on its behalf.

THE WARRANTIES AND REMEDIES HEREIN ARE EXCLUSIVE AND IN LIEU OF ANY AND ALL OTHER WARRANTIES OR REMEDIES EITHER EXPRESSED OR IMPLIED, HEREIN OR ELSEWHERE, INCLUDING WITHOUT LIMITATION WARRANTIES OF MERCHANTABILITY, FITNESS FOR ANY PARTICULAR PURPOSE, NON-INFRINGEMENT OR WARRANTIES RESULTING FROM COURSE OF PERFORMANCE, COURSE OF DEALING OR FROM USAGE OF TRADE. DISCOUNT WATER SOFTENERS, INC. HEREBY DISCLAIMS ALL OTHER WARRANTIES. DISCOUNT WATER SOFTENERS, INC. LIABILITY SHALL NOT EXCEED THE COST OF THE PRODUCT. DISCOUNT WATER SOFTENERS, INC. IS NOT RESPONSIBLE FOR INCIDENTAL OR CONSEQUENTIAL DAMAGES OR EXPENSES OF ANY KIND WHATSOEVER, INCLUDING LOSS OF PROFITS, UNDER ANY CIRCUMSTANCES AND REGARDLESS OF WHETHER DISCOUNT WATER SOFTENERS, INC. WAS AWARE OF THE POSSIBILITY OF ANY SUCH LOSS.

Free Manual PDF downloaded from www.SoftenerPlus.com/manuals/_pdf//manual.pdf
Back to product page: https://watersoftenerplus.com

15. System Configuration and Settings

Installer

Name: _____

Address: _____ City/State:_____

Phone: _____Install Date: _____

Softener System Configuration

Tank Size: Dia. _____In Height_____in Resin Volume: _____cu/ft.

Brine Tank Capacity: ☐ 85L ☐ 100L ☐ 130L

Media: _____

Control Valve Model: _____ Serial Number: _____

DLFC Size:_____ BLFC Size: _____ Injector:_____

Valve Programming

Regen Cycles: ☐ Cycle 1 ☐ Cycle 2 ☐ Cycle 3

Mode: ☐ A-01 Meter Delay ☐ A-02 Meter Immediate ☐ A-03 Intelligent Meter Delay

☐ A-04 Intelligent Meter Immediate ☐ A-05 Remaining Compare ☐ A-06 Timer ☐ A-07 Filter

Water Conditions and Quality

Total Hardness: _____grains Iron (Fe): _____ppm Acid (pH): _____

TDS: _____ppm Pressure of Inlet Water: _____PSI

Other: _____

Water Source: ☐ Well Water ☐ City Water ☐ Other: _____

Free Manual PDF downloaded from: https://watersoftenerplus.com/manuals/_pdf//manual.pdf
Back to product page: https://watersoftenerplus.com

16. Contact Information

Thank you for choosing this Discount Water Softener water treatment system. Please contact us with questions.

Discount Water Softeners, INC.
11245 Giordano Ct.
Huntley IL 60142
(847) 462-9000
sales@discountwatersofteners.com
discountwatersofteners.com

Free Manual PDF downloaded from: https://watersoftenerplus.com/manuals/_pdf//manual.pdf
Back to product page: https://watersoftenerplus.com