GENESIS 2 UPFLOW AND PREMIER SERVICE MANUAL

OWNERS MANUAL



1. Read all instructions carefully before operation.
2. Avoid pinched o-rings during installation by applying (provided with install kit) NSF certified lubricant to all seals.
3. This system is not intended for treating water that is microbiologically unsafe or of unknown quality without adequate disinfection before or after the system.

REVISION # 4
REVISION DATE 1/6/2021
80150313

Free Manual PDF downloaded from: https://watersoftenerplus.com/manuals/_pdf//manual.pdf
Back to product page: https://watersoftenerplus.com

Table of Contents

1. **Introduction** **3**
2. **Product Features and Applications** **4-5**
   a. Primary Applications 4
   b. Product Characteristics 4
   c. Three Regeneration Sequences 4
   d. 7 Regeneration Mode Options with Adjustable Cycle Times 5
3. **Product Dimensions and Specifications** **6-7**
4. **Pre-Installation Checklist** **8-9**
   a. Required Operating Conditions 8
5. **Valve Installation** **10-12**
   a. Unit Location 10
   b. Plumbing Mechanical Set Up 10
   c. Control Valve Installation 11
   d. System Sizing Chart 12
6. **Bypass** **13**
7. **Programming - Display and Instructions** **14-16**
   a. Programming: Modes A-03 16
8. **System Installation** **17-23**
   a. Plumbing Connections 17
   b. Drain Line Installation 17
   c. Brine Line and Brine Tank Installation 18
   d. System Installation Chart 22
   e. System Start-Up 23
9. **Assembly Drawings and Parts List** **24-25**
10. **Troubleshooting** **26-28**
    a. Control Valve 26-27
    b. Electronics 28
11. **Replacement Parts** **29**
12. **Accessories** **30-31**
    a. System Packing List 31
13. **Discount Water Softener Warranty Statement** **31-32**
14. **System Configuration and Settings** **33**
15. **Contact Information** **34**

Free Manual PDF downloaded from: https://watersoftenerplus.com/manuals/_pdf//manual.pdf
Back to product page: https://watersoftenerplus.com

1. Introduction

Thank you for choosing a **Genesis 2 Upflow Ceramic Rotary Valve**. Genesis 2 Upflow valves are designed with high flow rates to handle any residential or light commercial application. They feature innovative, patented ceramic discs for ultimate performance and reliability. The discs are abrasion and corrosion resistant, extending the life of the valve and significantly reducing maintenance costs.

Genesis 2 Upflow valves have 7 advanced programming options with fully adjustable cycles to minimize water usage during regeneration. They utilize up-flow regeneration which efficiently washes the media, exchanging more grains per pound of salt. Genesis 2 Upflow valves have signal output for external devices, program functions that remain in long term memory, and 72-hour memory backup should a power outage occur, giving you the confidence that your customers are receiving a cost-effective, high-quality water treatment solution.

Genesis 2 Upflow Valves Feature:

- Patented ceramic discs for longer life and reduced maintenance
- Highly configurable with easy to use program interface
- Long-term memory for program functions
- 72-hour memory backup
- 4 language options: English, Spanish, Chinese, French

Free Manual PDF downloaded from: https://watersoftenerplus.com/manuals/_pdf//manual.pdf
Back to product page: https://watersoftenerplus.com

2. Product Features and Applications

Primary Applications

Recommended for commercial and residential softening or demineralization water treatment systems.

- Softening System
- Iron Removal System
- Ion Exchange Equipment
- Boiler Softening Water Treatment
- RO Pre-treatment

Product Characteristics

Mechanical Components

The Genesis 2 Upflow uses internal ceramic discs which are corrosion and abrasion resistant to form a hermetic seal. Rotation of the upper disc aligns to the corresponding lower disc ports for Service, Backwash, Brine & Slow Rinse, Brine Refill and Fast Rinse modes.

Hard Water/No Hard Water Bypass

Up-flow regeneration with no hard water and hard water bypass options. This valve operates as a hard water bypass.

Excellent Flow Rate: 16 GPM to 22 GPM @ 15psi drop.

365-Day Usage Memory

Manual / Delayed Regeneration

Pressing at any time results in an immediate manual regeneration.
Pressing and holding for 3 seconds, when system is locked, results in a delayed regeneration at the preselected time.

Extended Power Outage Indicator

If outage exceeds 3 days, the time of day indicator "" will flash 12:12. The current time of day needs to be re-set. All other set parameters remain stored in memory. The valve will resume to operate from the point of the power outage.

Three Regeneration Sequences

Lockout Function

Keypad will lock after 5 minutes without use. To access the parameter changes press and hold and simultaneously for 3 seconds to unlock.

Free Manual PDF downloaded from: https://watersoftenerplus.com/manuals/_pdf//manual.pdf
Back to product page: https://watersoftenerplus.com

LCD Display Screen

Advanced Valve and External Device Connections

- Interlock and Alternate Interlock
- Remote Handling
- Solenoid Valve

7 Regeneration Mode Options with Adjustable Cycle Times

Maximum 14 Day Regeneration Interval

When the valve reaches the maximum programmed service days, without reaching the set service capacity, it will trigger a regeneration at the pre-programmed time of day. Regeneration(s) reset both the maximum day regeneration value and the service capacity value.

One Button to Change the Current Time

Pressing and holding the button for 3 seconds, when system is locked, allows the current time of day to be adjusted.

Service Alarm

When the service alarm feature counts-down and reaches set point, (Selectable 30 day min to 900 day max in 30 day increments) the alarm will activate at 8pm. The alarm will sound for 2 minutes and then shut off automatically. To silence alarm within the 2 minute period, press any button. A service call message will then appear on the screen as a signal for the homeowner to contact a water treatment professional for routine service. To eliminate this message from the screen, unlock the valve programming by pressing the UP and DOWN arrows simultaneously until the padlock in the upper left corner of the screen disappears (approximately 3 seconds). Next, enter the programming menu by pressing the MENU/CONFIRM button once and then pressing the BACK/REGENERATION button once. The system will then go back to normal status and the operational days will re-start new count-down. Note: The system will operate normally when it is displaying the service alarm message.

Free Manual PDF downloaded from: https://watersoftenerplus.com/manuals/_pdf//manual.pdf
Back to product page: https://watersoftenerplus.com

3. Product Dimensions and Specifications

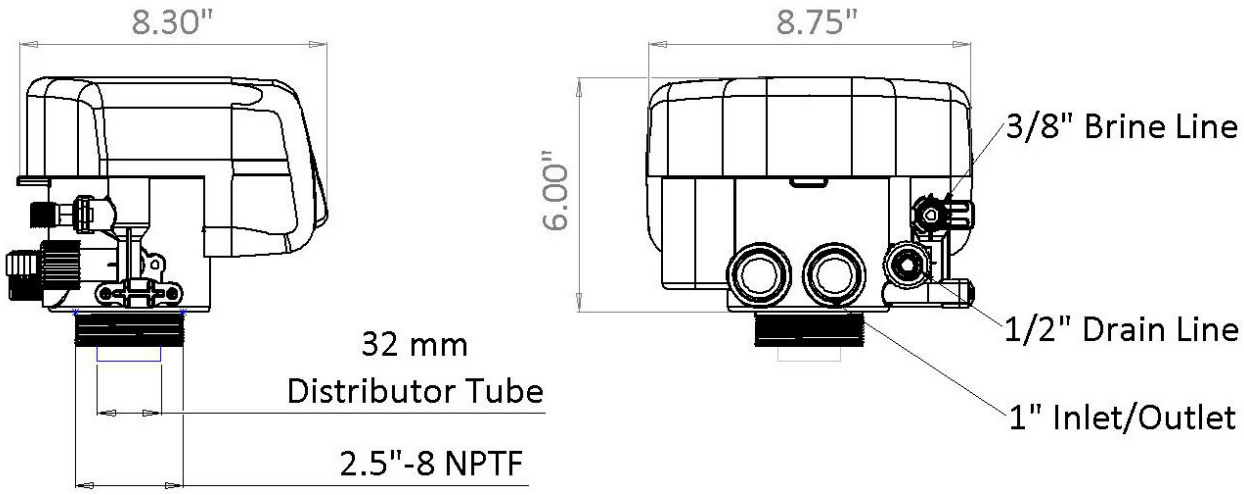

Length (max.)	Width (max.)	Height (max.)	Regeneration Mode
8.3"	8.75"	7.5"	Up-flow

These valve dimensions are for reference only.

Connect Port Dimensions							
Product Model	**Inlet Port**	**Outlet Port**	**Drain Port**	**Brine Port**	**Base**	**Riser Pipe**	**Hard Water Bypass**
Genesis 2 Upflow-NHW	1" NPT	1" NPT	3/4" NPT	3/8"	2.5" 8NPSM	32 mm	No
Genesis 2 Upflow-HW	1" NPT	1" NPT	3/4" NPT	3/8"	2.5" 8NPSM	32 mm	Yes

Main Technical Parameters	
Water Capacity	See Performance Data Sheet
Power Input	100-240VAC / 50-60Hz
Power Output	12VDC / 2A
Regeneration Cycles	Sequence 1: Service → Backwash → Brine & Slow Rinse → Fast Rinse → Brine Refill Sequence 2: Service → Backwash → Brine & Slow Rinse → Backwash → Fast Rinse → Brine Refill Sequence 3: Service → Brine Refill → Service (180 min-time fixed) → Backwash → Brine & Slow Rinse → Backwash → Fast Rinse

Free Manual PDF downloaded from: https://watersoftenerplus.com/manuals/_pdf//manual.pdf
Back to product page: https://watersoftenerplus.com

Regeneration Mode	A-01 Meter Delay: Regeneration happens when the capacity reaches zero and the preset time of regeneration is reached. A-02 Meter Immediate: Regeneration happens when the capacity reaches zero. A-03 Intelligent Meter Delay (manufacturer default preset): Do not change unless consulting a water treatment professional first. A-04 Intelligent Meter Immediate: The same function as A-02 but the capacity is determined by entering the Total Resin Capacity and Feed Water Hardness. The control valve automatically calculates the gallons for regeneration. A-05 Remaining Compare: Compares current usage with previous 365 day daily usage to intelligently determine when regeneration will occur. Regeneration starts at the set regeneration time. A-06 By Day (timer): Service days count down to zero (0) and regeneration starts at the set regeneration time. A-07 Filter Meter: Filter mode, regeneration occurs when the capacity reaches zero and the preset time for regeneration is reached.

Free Manual PDF downloaded from: https://watersoftenerplus.com/manuals/_pdf//manual.pdf
Back to product page: https://watersoftenerplus.com

4. Pre-Installation Checklist

IMPORTANT NOTICE

Read through the instructions thoroughly and obtain all materials and tools before proceeding with the installation. Be sure to follow all applicable national, state, county and local plumbing codes and regulations.

All plumbing and electrical work should be performed by an accredited professional to ensure all local, state, and municipal guidelines are met.

During cold weather it is recommended that the installer warm the valve to room temperature before operating.

For outdoor installation ensure that system cannot freeze and is protected from direct sunlight and weather conditions including rain. Outdoor weather cover can be added for additional weather protection of the control valve. Warranty coverage does not include damage due to weather or acts of God.

Required Operating Conditions

Working Conditions	Working Pressure	20psi ~ 120psi
	Water Temperature	35 °F ~ 125 °F
Working Environment	Environment Temperature	35 °F ~ 125 °F
	Relative Humidity	≤95%
	Power Source	< 100-240VAC / 50-60Hz
Inlet Water Quality	Turbidity	< 2FTU
	Hardness	< 60 grains per gallon

CAUTION

Do not exceed 120 psi water pressure.
Do not exceed 35° C / 125° F water temperature.
Do not subject unit to freezing conditions.

Failure to use this product within the described conditions may void the warranty.

Free Manual PDF downloaded from: https://watersoftenerplus.com/manuals/_pdf//manual.pdf
Back to product page: https://watersoftenerplus.com

- Do not use the system with water that is microbiologically unsafe or of unknown quality without adequate disinfection before or after the system.

- Do not use the brine tube, injector body, or other connectors on the Genesis 2 Upflow valve as a handle to carry the system.

- Ensure there is salt in the brine tank at all times when this valve is used for softening. The brine tank should contain clean water softening salt only, at least 99.5% pure. Only use clean water softener salt in pellet granular or block form.

- When there is moderate to high turbidity, a filter should be installed before the water softening system on the inlet side.

- If the water pressure exceeds 120psi, a pressure reducing valve must be installed before the water inlet. If the water pressure exceeds 80 psi, installing a pressure reducing valve before the water inlet is highly recommended. If the water pressure is under 20 psi, a booster pump must be installed before the water inlet.

- Replacement parts for the Genesis 2 Upflow valve should only be purchased through Discount Water Softeners Genesis resellers. Electrical components, such as transformers, are specific to the Genesis 2 Upflow valve from Discount Water Softener.

- Regular interval monitoring of the water quality and work environment is recommended to ensure proper operation of the valve and system.

- Any modification to Genesis equipment, which is outside the standard scope of supply, voids the product warranty.

- Genesis equipment, like all modern electronic devices, can be damaged by electrical surges or brown outs. Every effort has been taken to harden the circuits, by design, to protect against such events. These precautions, or even additional surge protection, are not 100% effective. Therefore, equipment damage caused by abnormal electrical events is not covered by warranty.

Free Manual PDF downloaded from: https://watersoftenerplus.com/manuals/_pdf//manual.pdf
Back to product page: https://watersoftenerplus.com

5. Valve Installation

Unit Location

- The filter or softener should be located close to a floor drain away from direct sunlight and any heat sources.
- Protect equipment from direct sunlight and precipitation exposure.
- Install equipment in a location safe from unauthorized access or vandalism.
- Ensure that the unit is installed with enough space for operation and maintenance.
- The installation surface should be clean and level.
- Install the unit in an environment which minimizes consumer risk of loss in the event of malfunction.
- Discount Water Softeners offers many different products for many different applications, for both indoor and outdoor environments. If you are not 100% sure the equipment purchased is suitable for the installation application or environment, please check with a Discount Water Softener representative, or your local equipment provider, to ensure the proper equipment is selected. Equipment installed in inappropriate applications or environments are not covered by warranty.
- Brine tank should be located close to the control valve. Distance should not exceed 20 linear feet.

Plumbing and Mechanical Setup

If making a soldered copper installation, all sweat soldering should be done before connecting pipes to the valve. Torch heat will damage plastic parts.

When turning threaded pipe fittings onto plastic fitting, take precaution not to cross thread or over tighten.

Free Manual PDF downloaded from: https://watersoftenerplus.com/manuals/_pdf//manual.pdf
Back to product page: https://watersoftenerplus.com

Control Valve Installation

1. Remove the temporary shipping cap. The 32mm riser will come preinstalled in your tank. The appropriate amount of resin is factory installed in the tank up to 48,000 grain sizes. 64,000 grain and larger systems may have been partially loaded with resin and a media funnel and additional instruction provided to add the full amount of remaining resin. The actual resin in the tank may vary due to shipping conditions but the proper level will range from just above 1/2 to 2/3 full in the tank.
2. Install Valve Base O-ring around the neck of the valve.
3. Lubricate the center hub O-ring of the Genesis 2 Upflow valve.
4. Install the top basket with a twist and lock action to center hub of the Genesis 2 Upflow valve.
5. Do not use teflon tape or pipe sealant to attach control valve to tank.
6. Place Genesis 2 Upflow valve onto tank with the distributor pipe inserted down the middle of the top basket. Rotate clockwise to secure onto the tank.

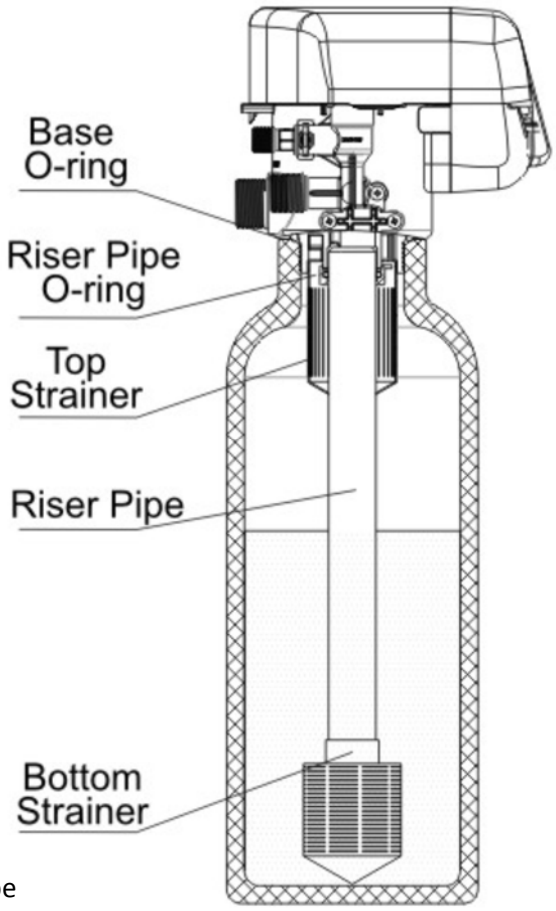

Figure 5-1

Do not overtighten! Overtightening may cause the valve to crack and void the warranty.

Free Manual PDF downloaded from: https://watersoftenerplus.com/manuals/_pdf//manual.pdf
Back to product page: https://watersoftenerplus.com

System Sizing Chart

Tank Size	Resin Volume cu. ft.	Total System Grains	Salt Setting	Injector Part No.	Color	DLFC	Part No.	Color	BLFC	Part No.	Color
9x48	1	17,682	Low	6302	Pink	2.02	8468060	White	0.32	8468056	White
9x48	1	23,196	Standard	6302	Pink	2.02	8468060	White	0.32	8468056	White
9x48	1	28,254	High	6302	Pink	2.02	8468060	White	0.32	8468056	White
10x44	1.25	22,102	Low	6302	Pink	2.86	8468061	Black	0.44	8468056	Brown
10x44	1.25	28,995	Standard	6302	Pink	2.86	8468061	Black	0.44	8468056	Brown
10x44	1.25	35,317	High	6302	Pink	2.86	8468061	Black	0.44	8468056	Brown
10x54	1.5	26,523	Low	6302	Pink	2.86	8468061	Black	0.44	8468056	Brown
10x54	1.5	34,794	Standard	6302	Pink	2.86	8468061	Black	0.44	8468056	Brown
10x54	1.5	42,381	High	6302	Pink	2.86	8468061	Black	0.44	8468056	Brown
12x52	2	35,364	Low	6303	Yellow	4.22	8468045	Blue	1.36	8468054	Yellow
12x52	2	46,392	Standard	6303	Yellow	4.22	8468045	Blue	1.36	8468054	Yellow
12x52	2	56,508	High	6303	Yellow	4.22	8468045	Blue	1.36	8468054	Yellow
13x54	2.5	44,205	Low	6308	Red	4.89	8468053	Yellow	1.36	8468054	Yellow
13x54	2.5	57,990	Standard	6308	Red	4.89	8468053	Yellow	1.36	8468054	Yellow
13x54	2.5	70,635	High	6308	Red	4.89	8468053	Yellow	1.36	8468054	Yellow
14x65	3	53,046	Low	6308	Red	4.89	8468054	Yellow	1.36	8468054	Yellow
14x65	3	69,588	Standard	6308	Red	4.89	8468054	Yellow	1.36	8468054	Yellow
14x65	3	84,762	High	6308	Red	4.89	8468054	Yellow	1.36	8468054	Yellow

Free Manual PDF downloaded from: https://watersoftenerplus.com/manuals/_pdf//manual.pdf
Back to product page: https://watersoftenerplus.com

IMPORTANT!!!

6. Bypass

Ceramic Bypass

Before attaching the bypass to the valve, verify the meter is installed into the outlet side of the bypass with the impeller facing in.

- Be sure to install flat rubber washers included with the bypass to the inside of the animated connectors before connecting to male threaded fittings on the backside of the control valve body.
- Attach animated connectors to the inlet/outlet and grease the O-rings.
- Attach the bypass valve and insert the clips.
- **ATTENTION:** Meter cable is installed into cable port on outlet side during system start-up.

Ceramic Bypass

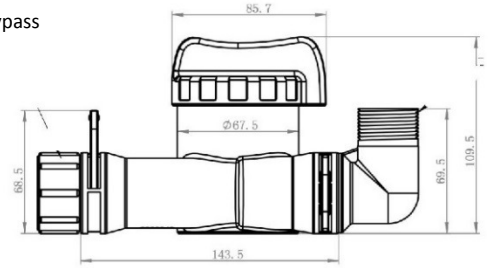

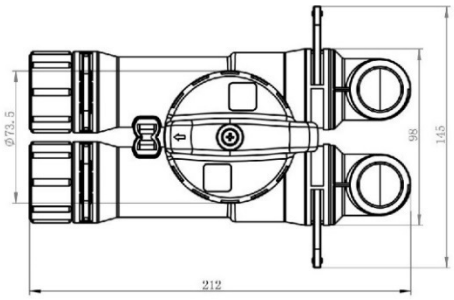

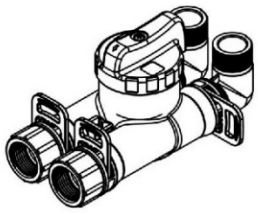

Free Manual PDF downloaded from: https://watersoftenerplus.com/manuals/_pdf//manual.pdf
Back to product page: https://watersoftenerplus.com

7. Programming: Display and Instructions

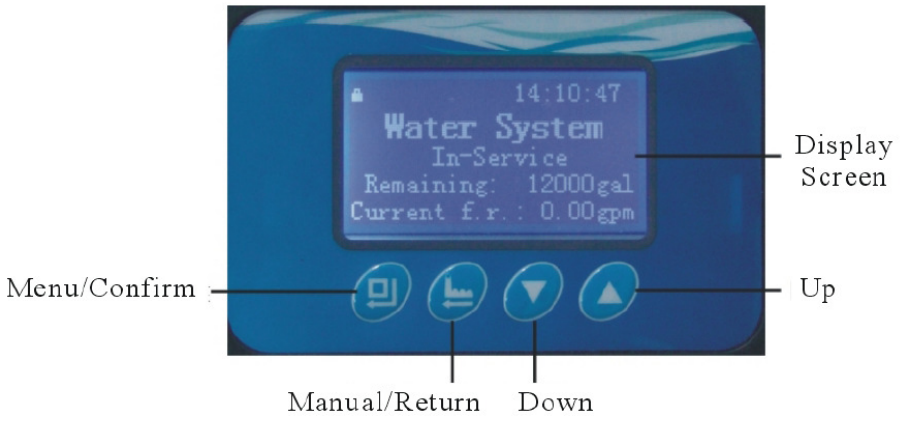

Manual / Delayed Regeneration

1. Pressing at any time results in an immediate manual regeneration.
2. Pressing and holding for 3 seconds, when system is locked, results in a delayed regeneration at the preselected time.

One Button to Change the Current Time

Pressing and holding the button for 3 seconds, when system is locked, allows the current time of day to be adjusted.

Unlocking the Keypad

The icon indicates the buttons are locked within 5 minutes of idle use. To unlock press and hold and for 3 seconds until the icon is off.

Enter Key

Press button to enter the basic programming mode, modify highlighted options, and return to the main menu.

Free Manual PDF downloaded from: https://watersoftenerplus.com/manuals/_pdf//manual.pdf
Back to product page: https://watersoftenerplus.com

Manual Regen/Esc. Key

Press ⏻ at any phase during manual regeneration to advance to the next phase or press during programming to exit to the home screen without modifying the current highlighted option.

Up and Down Arrows

▲ and ▼ buttons are used to scroll through the various basic programming options as well as adjust values.

Basic Programming

Allows you to adjust the time values for each phase. To enter basic programming, follow the directions below.

1. When the 🔒 icon is on, press and hold both ▲ and ▼ for 3 seconds to unlock the keypad.
2. Press ⏻ to enter the main menu; press ▲ or ▼ to highlight each option.
3. Press ⏻ to enter highlighted option.
4. Press ▲ or ▼ to adjust the value.
5. Press ⏻ to accept changes.
6. Press ⏻ to exit back to service status.

Advanced Programming (Dealer use ONLY)

This area is preprogrammed by the dealer for your specific water. Any adjustments made in advanced programming can cause your system to not function properly and even void warranty coverage.

1. Plug in the Genesis 2 Upflow. Immediately press ⏻ ⏻ ▼ in sequence to enter into the advanced setting.
2. Press ▲ or ▼ to select the menu item to be changed.
3. Press ⏻ to return to the previous menu.

ⓘ *If valve locks while programming, unplug power supply and repeat step above.*

4. Press ⏻ to enter the main menu; press ▲ or ▼ to highlight each option.
5. Press ⏻ to enter highlighted option.
6. Press ▲ or ▼ to adjust the value.
7. Press ⏻ to accept changes.
8. Press ⏻ to advance to service status.

Free Manual PDF downloaded from: https://watersoftenerplus.com/manuals/_pdf//manual.pdf
Back to product page: https://watersoftenerplus.com

Programming: Modes A-03

Parameter	Unit	Default	Description
Review Company Info			Displays current programmed company information.
Language *		English	
Set Company Info *			Set company information for display. Three lines available for input
Set Time of Day	24-hr. Clock		Set current time of day. 24-hour clock format.
Set Date			Set current month, day, and year. XX/XX/20XX
Set Program Type * Interlock / Alternate Interlock		Interlock	Used as a stand-alone installation and twin demand in conjunction with No Hard Water version of the Genesis 2 Upflow.
Set Regen Cycles *	1, 2, 3	2	Recommended setting to Sequence 2. See Pages 7-8. Service → Backwash → Brine & Slow Rinse → Back Wash → Fast Rinse → Brine Refill.
Set Clear Data *	Close/Open	Close	Skip during initial set-up. Clears all stored memory and restores default settings. Close = Data saved Open = Reset data
Set Regen Mode: A-01-A-07 *		A-03	A-03 Intelligent Meter Delayed.
Set Total Capacity	Grains		Preset for you by dealer.
Set Water Hardness	Grains per Gallon (gpg)	10	Total water hardness of incoming water supply. Amount varies per location. It is highly recommended to have tested for correct function/performance.
Set Number of People		4	The number of people in the residence
Set Regen Time	24-hr. Clock	02:00	The time of day the system will regenerate when it reaches system capacity.
Set Backwash Time	Min.	0	Set to 0 (zero) with Upflow softener system.
Set B.S.R. Time	Min.	60	Brine Slow Rinse Stage of Regeneration.
Set Secondary B.W.T. (Backwash Time)	Min.	10	
Set Fast Rinse Time	Min.	10	
Set B.R. Time (Brine Refill)	Min:Sec		Refill time is calculated and set by your dealer for standard efficiency. Do not change unless consulting with your dealer.
Max Days for Regeneration	Days	30	A regeneration is forced every 14 days if no water has been used.
Signal Output Mode b-01 (02) *		b-01	Used for external device. b-01. Disregard for standard installation.
Set Service Alarm *	Days	730	Alarm rings to prompt a service call. Occurs at the number of days set at 8pm for 2 minutes. Display changes to prompt the homeowner to call their dealer.
Daily Usage Log	Gal.		Shows the gallons used each day for the last 7 days.
Daily Peak Usage	Gal.		Shows the highest gallon usage day for the last 7 days.
Weekly Usage Log	Gal.		Shows the gallons used each week for the last 52 weeks.
Weekly Peak Usage	Gal.		Shows the highest gallon usage week for the last 52 weeks.
Monthly Usage Log	Gal.		Shows the gallons used each month for the last 12 months.
Monthly Peak Usage	Gal.		Shows the highest gallon usage month for the last 12 months.
Review Regen Times			Displays the number of times the valve has regenerated independently.
Review Software Ver.			Shows current software version of Genesis 2 Upflow valve.

Above parameters are located in standard program settings menu. *(*) Denotes parameters located in advanced program settings menu.*

Free Manual PDF downloaded from: https://watersoftenerplus.com/manuals/_pdf//manual.pdf
Back to product page: https://watersoftenerplus.com

8. System Installation

Valve Set-up and Installation - See Page 10-12.

Plumbing Connections

As Figure 9-1 shows; connect inlet pipe,via a 1" NPT female connector, to the inlet connector of bypass. Repeat steps for the outlet pipe.

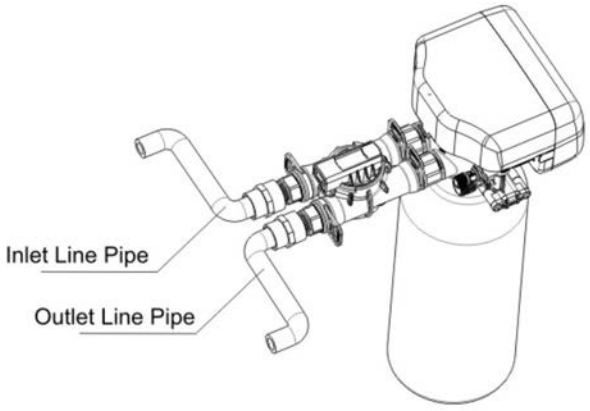

Figure 9-1

Drain Line Installation

As Figure 9-2 shows; insert drain line with an air gap to the floor drain. Valve drain hose is optional.

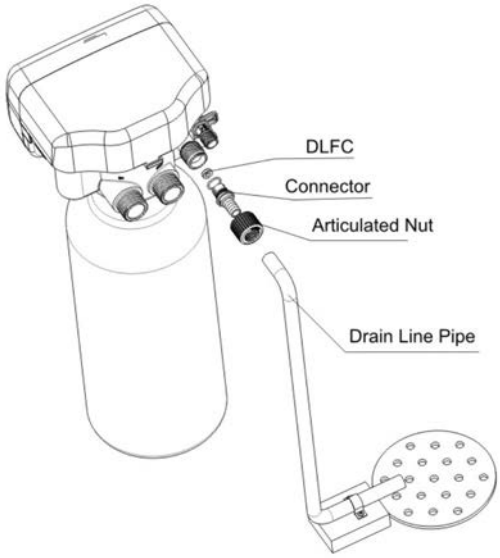

Figure 9-2

CAUTION

An air gap is required between the drain line and the drain (sewer). This avoids a syphon effect and reverse contamination.
Please check with local plumbing code.

Free Manual PDF downloaded from: https://watersoftenerplus.com/manuals/_pdf//manual.pdf
Back to product page: https://watersoftenerplus.com

Brine Line Connection

1. As Figure 9-3 shows; slide brine nut onto the 3/8" brine tubing.

2. Install the filter screen into the ferrule and insert the ferrule into the end of brine tube.

3. Insert tube into brine connector and tighten brine nut to the brine connector.

4. Only use stiff walled poly tubing. Hand tighten hose barb securing nut only. **DO NOT USE WRENCH.** Drain distance above softener control should not exceed 20 feet. If distance is greater than 20ft above control valve larger (1") pipe diameter should be used.

5. If hard piping drain the hose barb must remain in place. Securing nut may be removed.

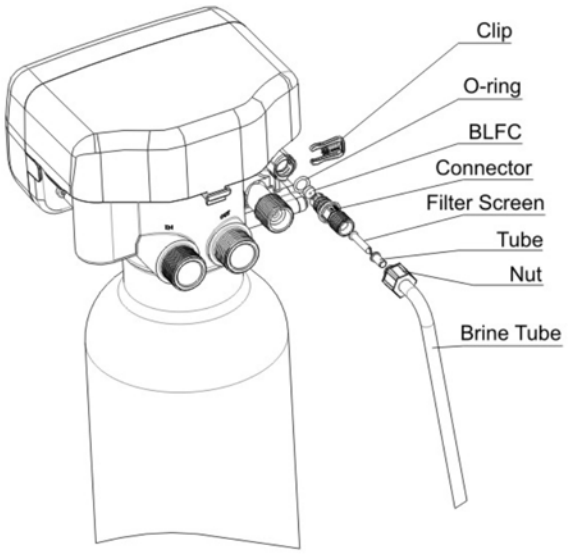

Figure 9-3

Take care to not crimp or plug the brine line or drain line.

Brine Tank Installation (design and assembly may vary) (also see adder assembly sheet).

1. Unpack brine tank components

   - Brine tank standoff with nut and washer
   - Overflow elbow with nut and washer
   - Optional quick connect clips

2. Open brine well and remove float. Ensure the inside of the tank and brine well are free of debris.







Free Manual PDF downloaded from: https://watersoftenerplus.com/manuals/_pdf//manual.pdf
Back to product page: https://watersoftenerplus.com

3. Assemble salt grid (4 feet, 1 base). Feet clip into the bottom of the base.

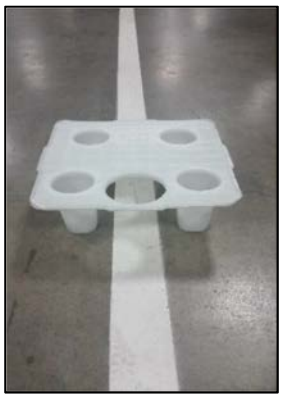

4. Insert assembled salt grid into brine tank by lining up the cut out hole with the drilled holes on the brine tank.



5. Insert the brine well, making sure the bottom brine well cap is attached. Insert the float assembly by lining up the top cut out holes.



Free Manual PDF downloaded from: https://watersoftenerplus.com/manuals/_pdf//manual.pdf
Back to product page: https://watersoftenerplus.com

6. Install brine tank standoff over the float assembly and insert into top cut out hole. Attach washer on outside of tank and secure unit.



7. Insert brine line into the top cut out hole, through the standoff, and into the quick connect elbow (optional: attach blue clips). Press firmly to make sure brine line is fully inserted into the quick connect. If your elbow connection has a compression connection, unscrew the compression nut while pushing the brine tubing into the fitting. Once loose enough the tubing will slide all the way into the elbow. Once inserted completely, tighten down compression nut.



8. Install overflow elbow fitting with washer on the outside of tank. Fasten nut on the inside of the tank.



Free Manual PDF downloaded from: https://watersoftenerplus.com/manuals/_pdf//manual.pdf
Back to product page: https://watersoftenerplus.com

9. Replace brine well lid.



10. Replace brine tank lid.



Free Manual PDF downloaded from: https://watersoftenerplus.com/manuals/_pdf//manual.pdf
Back to product page: https://watersoftenerplus.com

System Installation Chart

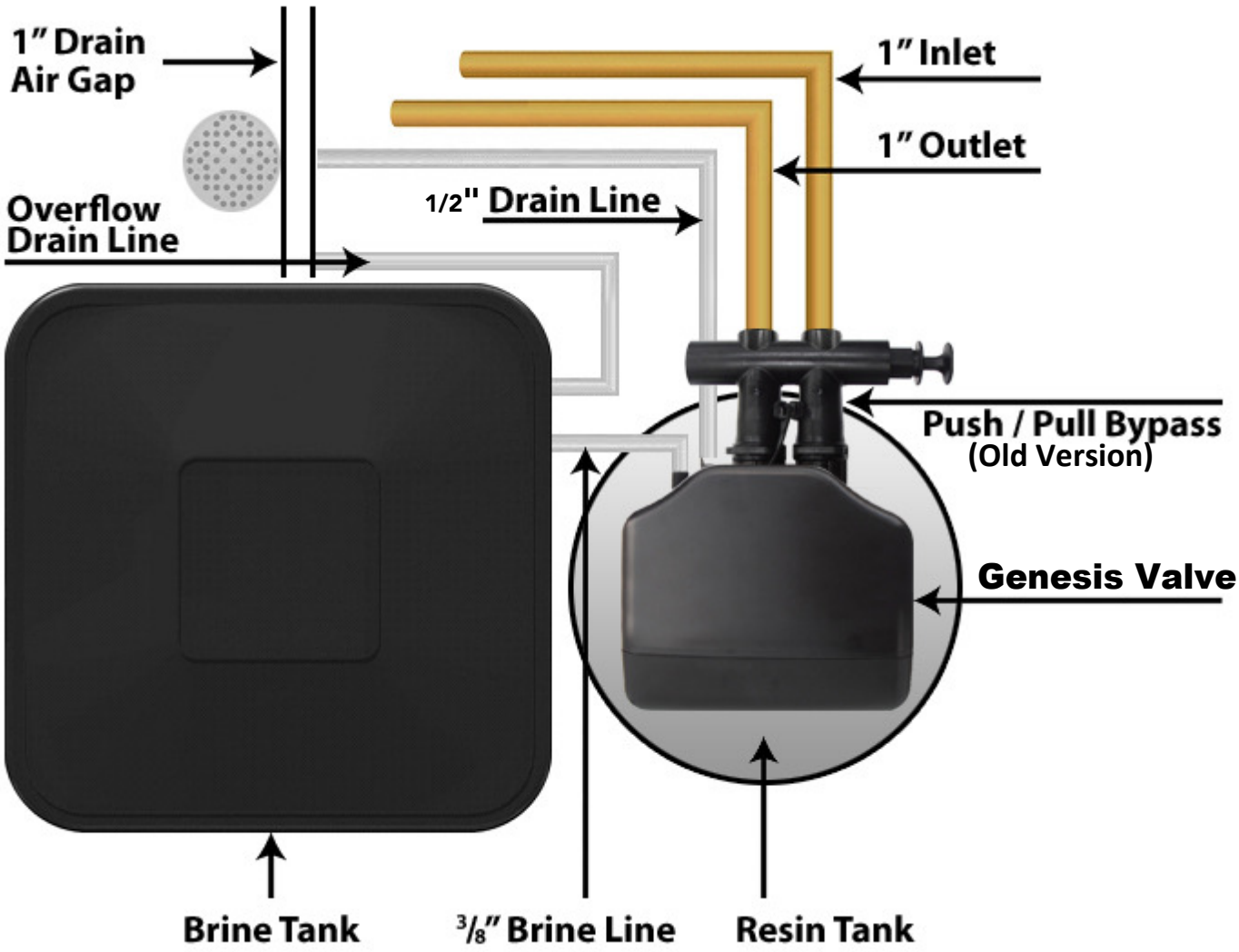

Free Manual PDF downloaded from: https://watersoftenerplus.com/manuals/_pdf//manual.pdf
Back to product page: https://watersoftenerplus.com

System Start-Up

1. Before running the Genesis 2 Upflow for the first time, you will need to make sure all connections are tight and there are no leaks.
2. Only turn your water back on with your bypass initially closed with the bypass handle in the closed position.
3. Ensure that your meter cable is plugged into the “D” shaped opening on the outlet side of the bypass between the bypass handle and control valve.
4. Your bypass assembly ships enclosed in shrink wrapped to ensure that the turbine meter impeller remains installed on the outlet (left) side of the assembly. Be sure the meter turbine remains installed in the outlet side of your bypass.
5. When initially allowing water into the control valve and resin tank be sure to slowly open the bypass 1/4 of the way open to ensure that the resin does not lift up from a sudden rush of water.
6. After the tank stops filling you can open the bypass to the full open position.
7. Next the resin should be rinsed to properly clear the tank of any resin “fines” or discolored water. To do this you will need to push the regeneration button to advance the control to Brine Draw/Rinse. Once the Brine Draw/Rinse stage starts counting down again push the regeneration button and the system will advance to the Backwash or Rinse stage depending on your model. Once the backwash or rinse stage starts allow the system to run water to the drain until any remaining trapped air and discolored water discharges until clear.
8. Once the water running to drain runs clear. Advance the control to the Brine Refill stage. After the Brine Refill stage starts counting down advance the control one more time and the system will go back to the normal service position.
9. Turn a faucet on, away from the installation location, until the air from the plumbing lines has been purged.
10. Prior to fully starting up of your system. Please manually add 5 gallons of water to the brine tank.
11. Next add in 40lbs of water softener salt to the brine tank.
12. Allow at least 6 hours for water to dissolve salt. After 6 hours perform a manual regeneration.
13. After regeneration is complete your water softener system is now fully operational.
14. Once water is confirmed that it is soft you can add more salt up to 90% full.

When you press the screen will display “motor running” as it positions the ceramic disc. Once “motor running” disappears and the next phase is displayed, press to advance to the next phase.

Free Manual PDF downloaded from: https://watersoftenerplus.com/manuals/_pdf//manual.pdf
Back to product page: https://watersoftenerplus.com

9. Assembly Drawings and Parts List

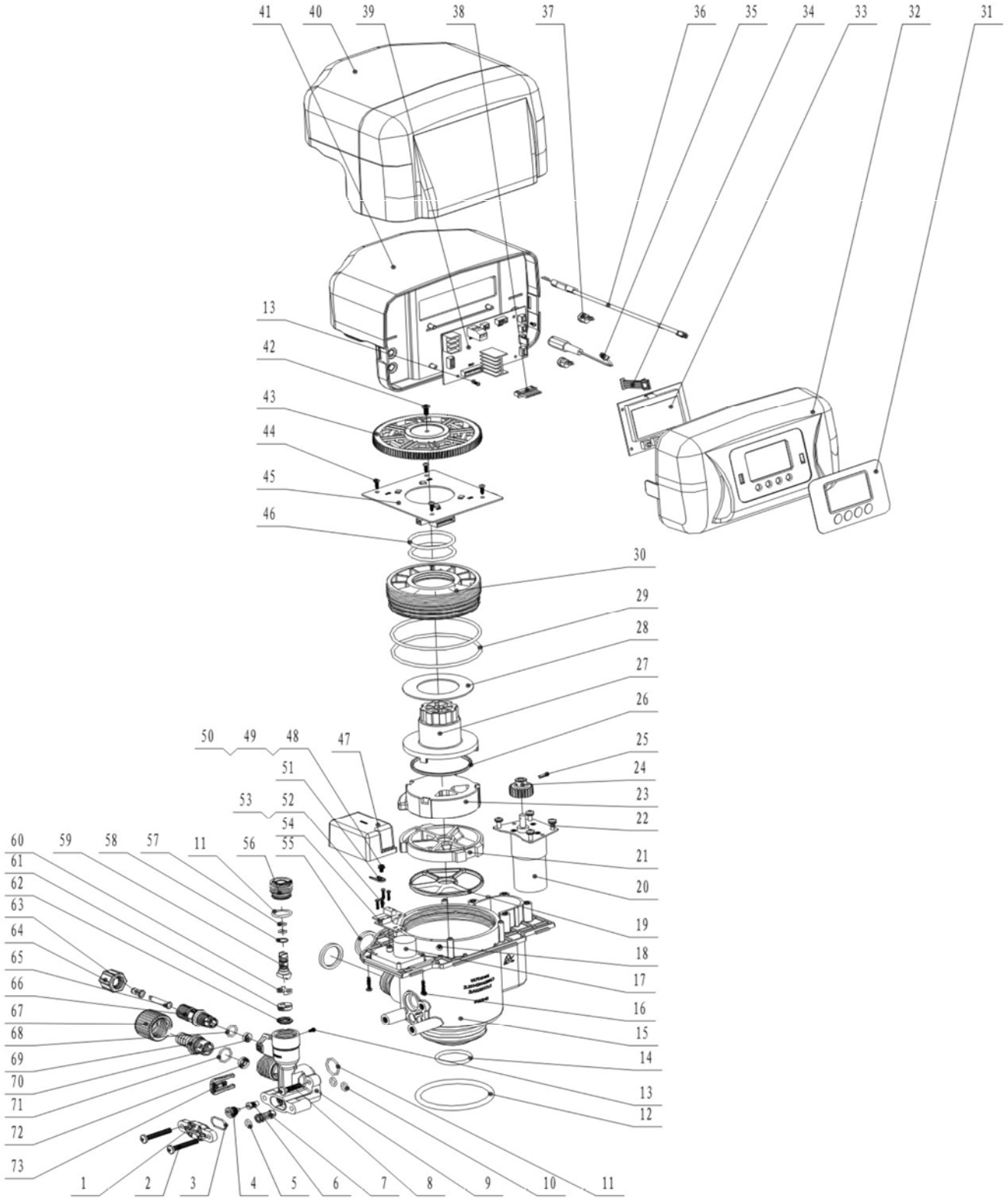

Free Manual PDF downloaded from: https://watersoftenerplus.com/manuals/_pdf//manual.pdf
Back to product page: https://watersoftenerplus.com

Item No.	Description	Qty.
1	Injector Cover	1
2	Screw, Cross	2
3	O-ring	1
4	Nozzle	1
5	O-ring	1
6	Throat	1
7	Filter Screen	1
8	Screw, Cross	1
9	Injector Body	1
10	O-ring	2
11	O-ring	2
12	O-ring	1
13	Screw, Cross	3
14	O-ring	1
15	Valve Body	1
16	Screw, Cross	2
17	Motor	1
18	Screw, Cross	4
19	Seal Ring	1
20	Motor	1
21	Fixed Disc	1
22	Screw, Cross	4
23	Moving Disc	1
24	Small Gear	1
25	Pin	1
26	Moving Seal Ring	1
27	Shaft	1
28	Anti-friction Washer	1
29	O-ring	2
30	Fitting Nut	1
31	Label	1
32	Control Box	1
33	Display Board	1
34	Wire for Display Board	1
35	Wire for Power	1
36	Probe Wire	1
37	Cable Clip	2

Item No.	Description	Qty.
38	Wire for Locating Board	1
39	Control Board	1
40	Weather Cover	1
41	Dust Cover	1
42	Screw, Cross	1
43	Gear	1
44	Screw, Cross	4
45	Locating Board	1
46	O-ring	2
47	Dust Cover	1
48	Screw, Cross	1
49	Washer	1
50	Spring Washer	1
51	Pick	1
52	Screw, Cross	4
53	Spring Washer	4
54	Control Board	1
55	Seal Ring	2
56	Fitting Nut	1
57	O-ring	2
58	Anti-friction Washer	1
59	Shaft	1
60	Moving Disc	1
61	Fixed Disc	1
62	Seal Ring	1
63	Tube	1
64	Hexagonal Nut	1
65	Net	1
66	Connector	1
67	Articulated Nut	1
68	O-ring	1
69	Connector	1
70	Brine Line Flow Control	1
71	O-ring	1
72	Drain Line Flow Control	1
73	Clip	1

Free Manual PDF downloaded from: https://watersoftenerplus.com/manuals/_pdf//manual.pdf
Back to product page: https://watersoftenerplus.com

10. Troubleshooting

Control Valve

Problem	Cause	Correction
1. Softener fails to regenerate	A. Electrical service to unit has been interrupted. B. Regeneration cycles set incorrectly. C. Controller is defective. D. Motor failure.	A. Check for consistent electrical service. B. Reset regeneration cycles. C. Replace controller. D. Replace motor.
2. Regeneration time is not correct	A. Time of Day not set correctly. B. Power failure over 3 days.	Check program and reset time of day.
3. Hard water	A. Bypass valve is open or leaking. B. No salt in brine tank. C. Injector plugged. D. Insufficient water level in brine tank. E. Leak at O-ring on riser pipe. F. Internal valve leak. G. Regeneration cycles not correct. H. Shortage of resin. I. Bad quality of feed water or meter blocked.	A. Close or repair bypass valve. B. Add salt to brine tank and maintain salt level above water level. C. Change or clean injector. D. Check brine tank refill time. E. Make sure riser pipe is not cracked. Check O-ring and tube pilot. F. Change valve body. G. Set correct regeneration cycles in the program. H. Add resin to mineral tank and check for leaks. I. Reduce the inlet turbidity, clean or replace meter.
4. Softener fails to draw brine	A. Line pressure is too low. B. Brine line is plugged. C. Brine line is leaking. D. Injector is plugged. E. Internal leakage. F. Drain line is plugged. G. Wrong size BLFC, DLFC and injector.	A. Increase line pressure. B. Clean brine line. C. Replace brine line. D. Clean or replace injector. E. Replace valve body. F. Clean drain line flow control. G. Install properly sized BLFC, DLFC and injector. See Page 13.
5. Unit uses too much salt	A. Improper salt setting. (Brine refill time) B. Excessive water in brine tank.	A. Check salt usage and salt setting. (Brine refill time) B. See problem no.6.
6. Excessive water in brine tank	A. Brine refill time is too long. B. Foreign material in brine line. C. Foreign material in brine valve or plugged drain line flow control. D. Power outage during brine fill. E. Safety valve in brine tank malfunction.	A. Reset correct refilling time. B. Clean brine line. C. Clean brine valve, and DLFC. D. Put the valve in bypass. Install a safety float in brine tank. E. Repair or replace brine safety valve.

Free Manual PDF downloaded from: https://watersoftenerplus.com/manuals/_pdf//manual.pdf
Back to product page: https://watersoftenerplus.com

7. Pressure lost or iron in conditioned water	A. Iron in the water supply pipes. B. Iron mass in the softener. C. Fouled resin bed. D. Too much iron in the raw water.	A. Clean the water supply pipe. B. Clean valve and add resin cleaning chemical, increase frequency of regeneration. C. Check backwash, brine draw and brine refill. Increase frequency of regeneration and backwash time. D. Install Iron removal equipment before softening.
8. Loss of mineral through drain line	A. Air in water system. B. Bottom strainer broken. C. Improperly sized drain line control (DLFC).	A. Assure that well system has proper air eliminator control. B. Replace bottom strainer. C. Check for proper drain rate.
9. Control cycles continuously	A. Signal to the locating PCB is interrupted. B. Controller is faulty. C. Foreign material in the drive gear. D. Time of regeneration steps were set to zero.	A. Check the connection between the main PCB to the locating PCB. B. Replace controller. C. Remove blockage in drive gear. D. Check program setting and reset.
10. Drain flows continuously	A. Internal valve leak. B. Interrupted power supply during backwash.	A. Check and repair valve body or replace it. B. Adjust valve to service position or turn off bypass valve and restart when power is restored.
11. Interrupted or irregular brine	A. Water pressure too low or not stable. B. Injector is plugged or faulty. C. Air in resin tank.	A. Increase water pressure. B. Clean or replace injector. C. Check and find the reason.
12. Water flows from drain or brine line after regeneration	A. Foreign material in the valve body. B. Hard water mixed in valve body. C. Water pressure is too high.	A. Clean foreign material in valve body. B. Change valve core or sealing ring. C. Reduce water pressure or use pressure release function.
13. High concentration of brine	A. Foreign material in injector. B. Brine valve cannot be shut-off. C. Rapid rinse time is too short.	A. Clean and repair injector. B. Replace brine valve or clean it. C. Extend rapid rinse time.
14. Decreased Capacity	A. Regeneration is not occurring. B. Fouled resin bed. C. Safety float is not at the proper height or brine time is low. D. Softener setting not proper. E. Raw water quality has altered. F. Flow meter is slow or stationary.	A. Reset regeneration parameters. B. Increase backwash flow rate and time, clean or change resin. C. Adjust brine draw time and float height. D. Re-test the water and change the valve parameters. E. Regenerate unit manually then reset regeneration cycle. F. Disassemble and clean flow meter or replace.
15. Power Outage Occurs During Regeneration	A. System locked in current phase/cycle.	A. Close the bypass until power resumes. If power outage lasts over 72 hours, the time of day will need to be reset.

Free Manual PDF downloaded from: https://watersoftenerplus.com/manuals/_pdf//manual.pdf
Back to product page: https://watersoftenerplus.com

Electronics

Problem	Cause	Correction
1. Abnormal display	A. Wiring to the front panel is loose. B. Control board is faulty. C. Transformer malfunction. D. Electrical service unstable.	A. Check and replace the wiring. B. Replace control board. C. Check and replace transformer. D. Verify power source.
2. Blank display	A. Wiring to the front panel is loose. B. Front panel damaged. C. Control board damaged. D. Electricity is interrupted.	A. Check and replace wiring. B. Replace front panel. C. Replace control board. D. Check power source.
3. E1 code	A. Wiring of locating board with controller fails to work. B. Locating board damaged. C. Mechanical drive failure. D. Faulty control board. E. Wiring to the motor has a short. F. Motor damaged.	A. Replace wiring. B. Replace locating board. C. Replace Discs or drive gear. D. Replace control board. E. Replace wiring. F. Replace motor.
4. E2 code	A. Hall effect on locating board damaged. B. Possible short in the wiring to the locating board. C. Control board malfunction.	A. Replace locating board. B. Replace wiring. C. Replace control board.
5. E3 or E4 code	A. Control board malfunction.	A. Replace control board.

Free Manual PDF downloaded from: https://watersoftenerplus.com/manuals/_pdf//manual.pdf
Back to product page: https://watersoftenerplus.com

11. Replacement Parts

Description	Part Number	Quantity
Brine Assembly Kit, 3/8" - #63, #64, #65, #66, #68, #73	REVV-217	1
Brine Screen and Tube - #63, #65	REVV-218	1
Bypass Clip	8270004	1
Control Board Kit - #35, #37, #39	REVV-221	1 Kit
Display Board Kit - #33, #34, #37	REVV-222	1 Kit
DLFC Buttons, BLFC Buttons & Injector Kit	REVV-215	0
Drain Assembly Kit - #67, #69, #71	REVV-216	1 Kit
Injector Body Assembly Kit - #1-3, #5, #7-11, #13, #56-69, #71, #73	REVV-220	1 Kit
Injector Cover O-ring - #3	8378148	1
Injector Filter Screen Kit - #5, #7	REVV-219	1 Kit
Locating Board Kit - #44, #45, #38	REVV-223	1 Kit
Meter Cable Assembly Kit - #36 & #37	REVV-232	1 Kit
Motor - #20	6158012	1
Motor, Brine - #17	6159052	1
O-ring, Valve Body - #12	8378143	1
O-ring, Valve Center Hub - #14	8378116	1
Transformer, 12VDC	6379021	1
Upper Distributor Basket, 32mm	REVV-213	1

Free Manual PDF downloaded from: https://watersoftenerplus.com/manuals/_pdf//manual.pdf
Back to product page: https://watersoftenerplus.com

12. Accessories (some no longer available)

Description	Part Number	Figure	Quantity
Dust Cover	72605-CV		1
Animated Connector with Flow Meter	AC/FM-F82		1 Pair
1" Inlet/Outlet Female to Female Adaptor	REVV-208		1
¾" 90 º Inlet/Outlet Elbow	REVV-209		1
1" 90 º Inlet/Outlet Elbow	REVV-210		1
¾" Male Adaptor	REVV-211		1
¾" Electronic 2-Way Ball Valve	F93-B		1
1" Electronic 2-Way Ball Valve	F93-C		1
1.5" Electronic 2-Way Ball Valve	F93-D		1
2" Electronic 2-Way Ball Valve	F93-E		1
1" Ceramic Tee 3-Way Ball Valve	F94-C		1

Free Manual PDF downloaded from: https://watersoftenerplus.com/manuals/_pdf//manual.pdf
Back to product page: https://watersoftenerplus.com

System Packing List

Description	Part Number	Qty.
Genesis 2 Upflow Control Valve	72605-HK, 72605B-HK	1
Bypass with 3/4" and 1" MNPT Elbows		1
Pressure Tank and Media (media may be installed in tank or bulk separate)	Varies	1
Distributor Tube and Lower Basket (installed in pressure tank)	REVV-PTT10-66	1
Upper Basket	REVV-213	1
Brine Tank and Float Assembly	Varies	1
3/8” Brine Line	BL3/8	4'
Grease Packet	SG-3005	1
Customer Manual	---	1
Tank Label	PTL-01	1

13. Discount Water Softeners Warranty Statement

LIFETIME LIMITED WARRANTY

Discount Water Softeners, Inc. warrants that your new water conditioner is built of quality material and workmanship. When properly installed and maintained the system will provide years of trouble free service.

LIFETIME LIMITED WARRANTY ON CONTROL VALVE

Discount Water Softeners, Inc. will replace any mechanical part which fails due to manufacturer defect for the life of the control valve. The circuit board portion of the control is limited within 84 months (Upflow)/120 months (Premier) from date of manufacture, as indicated by the serial number, provided the failure is due to a defect in material or workmanship. The only exception shall be when proof of purchase is provided. If proof of purchase is unable to be provided the warranty period will be effective from the date of manufacturing.

TEN YEAR LIMITED RESIN WARRANTY (PREMIER ONLY)

Discount Water Softeners, Inc. warrants that for ten (10) years from the date of purchase, we will replace the softening resin that has failed at no charge (Shipping Fees not included). Resin damage caused by water conditions will not be covered.

Free Manual PDF downloaded from: https://watersoftenerplus.com/manuals/_pdf//manual.pdf
Back to product page: https://watersoftenerplus.com

LIFE TIME GUARANTEE ON MINERAL TANKS AND BRINE TANKS
Discount Water Softeners, Inc. will provide a replacement mineral tank or brine tank to any original equipment purchaser in possession of a tank that fails provided that the water conditioner is at all times operated in accordance with specifications and not subject to freezing.

GENERAL CONDITIONS
Damage to any part of this water conditioner or filter as a result of misuse, misapplication, neglect, alteration, accident, installation or operation contrary to our printed instructions, damage to ion exchange resin and seals caused by chlorine / chloramines in the water supply, or damage caused by any force of nature is not covered in this warranty. We will repair or replace defective parts if our warranty department determines it to be defective under the terms of this warranty. Discount Water Softeners, Inc. assumes no responsibility for consequential damage, labor or expense incurred as a result of a defect or failure.

Product or Component	Warranty Period
Control Valves	Seven (7) Year / Premier Lifetime
Storage Tanks	Lifetime Warranty
Media Tanks	Lifetime Warranty
Any Other Components	One (1) Year
Ceramic Discs for Rotary Valves	Lifetime
RO and UF Filter Systems	One (1) Year

Free Manual PDF downloaded from: https://watersoftenerplus.com/manuals/_pdf//manual.pdf
Back to product page: https://watersoftenerplus.com

14. System Configuration and Settings

Installer

Name: _____

Address: _____ City/State:_____

Phone: _____Install Date: _____

Softener System Configuration

Tank Size: Dia. _____In Height_____in Resin Volume: _____cu/ft.

Brine Tank Capacity: ☐ 85L ☐ 100L ☐ 130L

Media: _____

Control Valve Model: _____ Serial Number: _____

DLFC Size:_____ BLFC Size: _____ Injector:_____

Valve Programming

Regen Cycles: ☐ Cycle 1 ☐ Cycle 2 ☐ Cycle 3

Mode: ☐ A-01 Meter Delay ☐ A-02 Meter Immediate ☐ A-03 Intelligent Meter Delay

☐ A-04 Intelligent Meter Immediate ☐ A-05 Remaining Compare ☐ A-06 Timer ☐ A-07 Filter

Water Conditions and Quality

Total Hardness: _____grains Iron (Fe): _____ppm Acid (pH): _____

TDS: _____ppm Pressure of Inlet Water: _____PSI

Other: _____

Water Source: ☐ Well Water ☐ City Water ☐ Other: _____

Free Manual PDF downloaded from: https://watersoftenerplus.com/manuals/_pdf//manual.pdf
Back to product page: https://watersoftenerplus.com

15. Contact Information

Thank you for choosing this Discount Water Softener water treatment system. Please contact us with questions.

Discount Water Softeners, INC.
11245 Giordano Ct.
Huntley IL 60142
(847) 462-9000
sales@discountwatersofteners.com
discountwatersofteners.com

Free Manual PDF downloaded from: https://watersoftenerplus.com/manuals/_pdf//manual.pdf
Back to product page: https://watersoftenerplus.com