GENESIS PREMIER & UPFLOW WATER SOFTENER SYSTEMS

OWNERS MANUAL



WQA Tested and Certified according to NSF/ANSI 44 for effective reduction of hardness (calcium and magnesium) as verified and substantiated by test data.

Tested and Certified by the Water Quality Association to CSA B483.1.

C

REVISION # 2
REVISION DATE 4/10/2014
80150313

1. Read all instructions carefully before operation.
2. Avoid pinched o-rings during installation by applying (provided with install kit) NSF certified lubricant to all seals.
3. This system is not intended for treating water that is microbiologically unsafe or of unknown quality without adequate disinfection before or after the system.

Free Manual PDF downloaded from: https://watersoftenerplus.com/manuals/_pdf//manual.pdf
Back to product page: https://watersoftenerplus.com

Efficiency Statement

This product is efficiency rated according to NSF/ANSI 44. The stated efficiencies are valid only at the specified salt dosages and maximum service flow rate.

Performance Data Sheet

Model Number	GEN32UF	GEN40UF	GEN48UF	GEN64UF	GEN90UF
Qty High Capacity Resin	1.0 ft^3	1.25 ft^3	1.5 ft^3	2.0 ft^3	3.0 ft^3
Rated Service Flow (gpm)	11.0	11.2	11.2	12.4	12.9
Pressure Drop at Rated Service Flow (psi)	15.0	15.0	15.0	15.0	15.0
Rated Softening Capacity (grains)	13,269 @ 3lbs	15,586 @ 3.75lbs	20,443 @ 4.5lbs	27,258 @ 6lbs	40,887 @ 9lbs
Efficiency (grains/lb salt)	4,543	4,543	4,543	4,543	4,543
Max. Flow Rate to Drain (gpm)	2.0	2.4	2.4	3.5	5.0
Working Pressure	Min. 20 - Max. 125 psi				
Operating Temperature	Min. 39 - Max. 100 degrees Fahrenheit				

These softeners conform to NSF/ANSI 44 for the specific performance claims as verified and substantiated by test data. These models are efficiency rated. The efficiency rating is valid only at the stated salt dose and maximum service flow rate. They have a demand initiated regeneration (D.I.R.) feature that complies with specific performance specifications intended to minimize the amount of regenerant brine and water used in their operation. These softeners have a rated softener efficiency of not less than 3350 grains of total hardness exchange per pound of salt (based on sodium chloride) and shall not deliver more salt than their listed ratings. The rated salt efficiency is measured by laboratory tests described in NSF/ANSI Standard 44. These tests represent the maximum possible efficiency that the systems can achieve. Operational efficiency is the actual efficiency after the system has been installed. It is typically less than the efficiency due to individual application factors including water hardness, water usage, and other contaminants that reduce the softener's capacity. These systems are not intended for use with water that is microbiologically unsafe or of unknown quality without adequate disinfection before or after the system. For best results, use plain, white nugget or pellet salt. Refer to Installation/operation manual and warranty for further details on installation, parts and service, maintenance and further restrictions or limitations to the use of the product.



C

WQA Tested and Certified according to NSF/ANSI 44 for effective reduction of hardness (calcium and magnesium) as verified and substantiated by test data.

Tested and Certified by the Water Quality Association to CSA B483.1.

Free Manual PDF downloaded from: https://watersoftenerplus.com/manuals/_pdf//manual.pdf
Back to product page: https://watersoftenerplus.com

Table of Contents

	PAGE
Unpacking / Inspection	**3**
Safety Guide	**3**
Proper Installation	**4**
Specification	**5**
Getting Started	**5**
Where to Install	**6**
Installation Instructions	**7**
Installation Diagrams	**8**
System Start Up	**10**
Programming Instructions	**11**
About The System	**12**
Maintenance	**14**
Main Repair Parts	**16**
Trouble Shooting	**22**
Warranty	**23**

Unpacking / Inspection

Be sure to check the entire water softener shipment for possible damage that may occur in transit.

Small parts, needed to install the softener, are in a parts bag. To avoid loss of the small parts, keep them in the parts bag until you are ready to use them.

Safety Guide

For your safety, the information in this manual must be followed to minimize the risk of electric shock, property damage or personal injury.

- Check and comply with your state and local codes. You must follow these guidelines.
- Use care when handling the water softening system. Do not turn upside down, drop, drag or set on sharp protrusions.
- The water softening system works on 12 volt-60 Hz electrical power only. Be sure to use only the included transformer.
- Transformer must be plugged into an indoor 120 volt, grounded outlet only.
- Use clean water softener salt only. Pellet, crystal, nugget and block forms are all fine to use. Potassium chloride may be used as an alternative for sodium chloride.
- Keep the salt lid in place on the softener brine tank unless servicing the unit or refilling with salt.
- **WARNING**: This system is not intended for treating water that is microbiologically unsafe or of unknown quality without adequate disinfection before or after the system.

NOTE: *Additional video instructions are available on our website via the link below: https://www.discountwatersofteners.com/install-guides/*

Free Manual PDF downloaded from: https://watersoftenerplus.com/manuals/_pdf//manual.pdf
Back to product page: https://watersoftenerplus.com

Proper Installation

This water softening system must be properly installed and located in accordance with the Installation Instructions before it is used.

- ***Do not*** install or store where it will be exposed to temperatures below freezing or exposed to any type of weather.
- ***Do not*** install install in direct sunlight or where it will be exposed to precipitation. Excessive sun/heat may cause distortion or other damage to non-metallic parts. Precipitation can affect the electronics of the system. Please see our **Outdoor Water Resistant / UV Cover** for outdoor installation - https:// www.discountwatersofteners.com/genesis-water-softener-cover-outdoor
- Properly ground to conform with all governing codes and ordinances.
- Use only *lead-free solder and flux* for all sweat-solder connections, as required by state and federal codes.
- Maximum allowable inlet water pressure is 125 psi. If daytime pressure is over 80 psi, night time pressure may exceed the maximum. Use a pressure reducing valve to reduce the flow if necessary.
- Softener resins may degrade in the presence of chlorine above 2 ppm. If you have chlorine in excess of this amount, you may experience reduced life of the resin. In these conditions, you may wish to consider purchasing a whole house carbon filter softener system with a chlorine reducing media. Check with your local municipality for chlorine level.
- ***WARNING:*** Discard all unused parts and packaging material after installation. Small parts remaining after the installation could be a choke hazard.

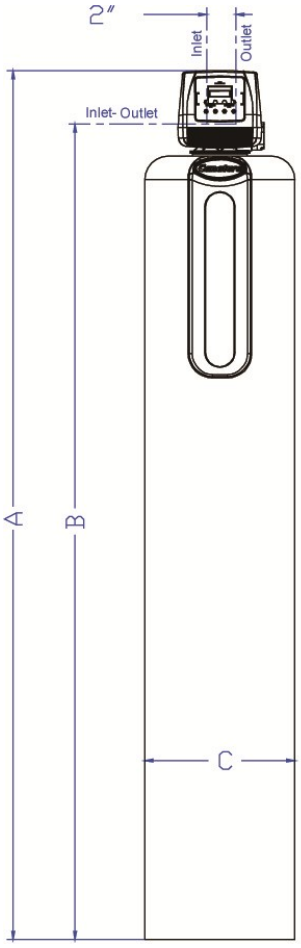

	NST45UD1	NST70UD1
A	50-3/8"	64"
B	41-5/8"	55-1/2"
C	11"	13"

*This system now ships with an 18" round brine tank.

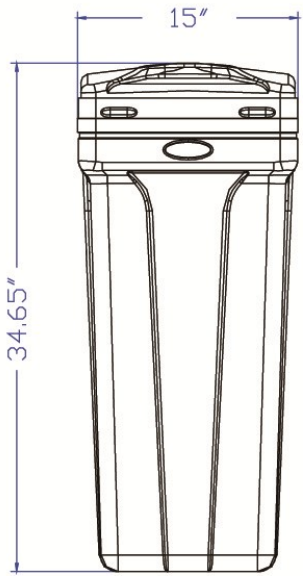

Free Manual PDF downloaded from: https://watersoftenerplus.com/manuals/_pdf//manual.pdf
Back to product page: https://watersoftenerplus.com

Specifications

Specifications	GEN32UF	GEN40UF	GEN48UF	GEN64UF	GEN90UF
Optional Settings - High Efficiency					
Salt Used - Per Regeneration	3.0 lbs	3.75 lbs	4.5 lbs	6.0 lbs	9.0 lbs
Water Used - Regeneration	31.6 gal	44.3 gal	44.3 gal	60.9 gal	102.2 gal
Hardness Removal - Grains	15,000	18,750	22,500	30,000	45,000
Factory Settings - Standard Capacity					
Salt Used - Per Regeneration	6.0 lbs	7.5 lbs	9.0 lbs	12.0 lbs	18.0 lbs
Water Used - Regeneration	43.4 gal	62.7 gal	62.7 gal	87.1 gal	139.2 gal
Hardness Removal - Grains	25,000	30,750	37,500	50,000	75,000
Optional - High Capacity					
Salt Used - Per Regeneration	10.0 lbs	12 lbs	15.0 lbs	20.0 lbs	30.0 lbs
Water Used - Regeneration	64.3 gal	90.3 gal	90.3 gal	124.6 gal	196.2 gal
Hardness Removal - Grains	30,000	36,000	45,000	60,000	90,000
Resin Quantity - Cubic Feet	1.0 ft^3	1.25 ft^3	1.5 ft^3	2.0 ft^3	3.0 ft^3
Tank Size	9”x48”	10”x44”	10”x54”	12”x52”	14”x65”
Media Loaded	Yes	Yes	Yes	No	No
Brine Tank	18”x18”x34.7”	18”x18”x34.7”	18”x18”x34.7”	18”x18”x34.7”	18”x40”
Salt Storage Capacity	240 lbs	240 lbs	240 lbs	240 lbs	420 lbs
Flow Rate @ 15 psi Pressure Drop	11.0 gpm	11.2 gpm	11.2 gpm	12.2 gpm	12.6 gpm
Flow Rate @ 25 psi Pressure Drop	15.0 gpm	15.1 gpm	15.1 gpm	16.2 gpm	16.6 gpm
Back Wash Flow Rate	2.0 gpm	2.0 gpm	2.4 gpm	3.5 gpm	5.0 gpm
Shipping Weight	122 lbs	132 lbs	155 lbs	158 lbs	244 lbs
Regeneration Type	Counter Current / Up Flow				
Maximum Efficiency	5,060 grains / lb salt				
Plumbing Connections	3/4” (Options 1”)				
Resin Type	10% Crosslink High Capacity Resin				
Electrical Requirements	Input 120V 60 Hz - Output 12V 650mA				
Water Temperature	Min. 39 - Max. 100 degrees Fahrenheit				
Water Pressure	Min. 20 - Max. 125 psi				

- Continuous operation at flow rates greater than the service flow rate may affect capacity and efficiency performance.
- The manufacturer reserves the right to make product improvements which may deviate from the specifications and descriptions stated herein, without obligation to change previously manufactured products or to note the change.
- The above capacity and flow rate specifications have not been validated by WQA.

Getting Started

Items Needed For Installation

- Pliers
- Screwdriver
- Teflon tape
- Razor knife
- Two adjustable wrenches
- Additional tools may be required if modification to home plumbing is required.
- Plastic inlet and outlet fittings are included with the softener. To maintain full valve flow, 3/4” or 1” pipes to and from the softener fittings are recommended. You should maintain the same, or larger, pipe size as the water supply pipe, up to the softener inlet and outlet.
- Use copper, brass or PEX pipe and fittings.
- Some codes may also allow for PVC plastic pipe.
- A minimum ½” ID Drain Line (optional purchase) and Hose Clamp (not included) are required for proper drainage of the system. Length of the Drain Line will depend on the distance from the unit to the drain. ***Do not*** use clear vinyl tubing. Choose a stiff walled tubing that will not pinch, kink or collapse.
- Water softener salt is required to fill the brine or cabinet tank. Pellet, crystal, nugget and block forms can be used. Potassium chloride may be used as an alternative for sodium chloride.

Free Manual PDF downloaded from: https://watersoftenerplus.com/manuals/_pdf//manual.pdf
Back to product page: https://watersoftenerplus.com

Where To Install The Softener

- Place the softener as close as possible to the pressure tank (well system) or water meter (city water).
- Place the softener as close as possible to a floor drain, or other acceptable drain point (laundry tub, sump, standpipe, etc.).
- Connect the softener to the main water supply pipe BEFORE the water heater. **DO NOT RUN HOT WATER THROUGH THE SOFTENER**. Temperature of water passing through the softener must be less than 100 deg. F.
- Keep outside faucets on hard water to save soft water and salt.
- Do not install the softener in a place where it could freeze. **Damage caused by freezing is not covered by the warranty.**
- Put the softener in a place water damage is least likely to occur if a leak develops. The manufacturer will not repair or pay for water damage.
- A 120 volt electric outlet, is needed within 6 feet of the softener. (The transformer has an attached 6 foot power cable.) **Be sure the electric outlet and transformer are in an inside location, to protect from wet weather. DO NOT USE AN EXTENSION CORD.**
- For outside installation the system must be protected from the elements. Keep the softener out of direct sunlight and precipitation. The sun's heat may soften and distort plastic parts. Precipitation may affect electronic components. Damage caused by outdoor exposure is not covered by the warranty. Please see our **Outdoor Water Resistant / UV Cove**r for outside installation - https:// www.discountwatersofteners.com/genesis-water-softener-cover-outdoor

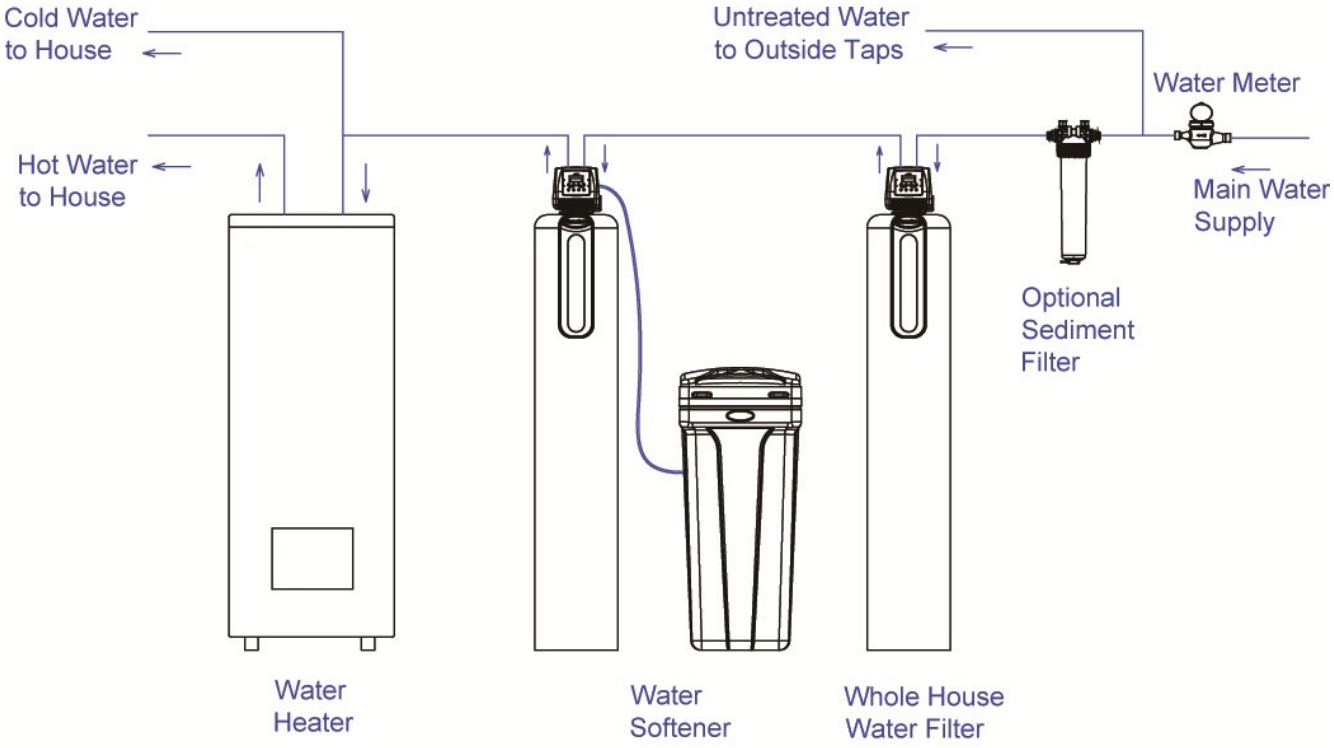

Free Manual PDF downloaded from: https://watersoftenerplus.com/manuals/_pdf//manual.pdf
Back to product page: https://watersoftenerplus.com

Installation Instructions

1. If your hot water tank is electric, turn off the power to it to avoid damage to the element in the tank.
2. If you have a private well, turn the power off to the pump and then shut off the main water shut off valve. If you have municipal water, simply shut off the main valve. Go to the faucet, (preferably on the lowest floor of the house) turn on the cold water until all pressure is relieved and the flow of water stops.
3. Locate the softener tank and brine tank close to a drain where the system will be installed. The surface should be clean and level.
4. Apply NSF certified lubricant (included in parts bag) to all four control valve O-ring seals to protect them from being pinched during installation. Note: There is an Inner Distributor Tube O-ring and an Outer Control Head O-ring on the underside of the control head. Attach the upper screen cone (in small parts box) to the bottom of the control valve. Attach the control valve to the resin tank (turning clockwise) one half turn past hand tight.
5. Connect the inlet and outlet of the softener using appropriate fittings. Perform all plumbing according to local plumbing codes.
    - **ON COPPER PLUMBING SYSTEMS BE SURE TO INSTALL A GROUNDING WIRE BETWEEN THE INLET AND OUTLET PIPING TO MAINTAIN GROUNDING.**

Any solder joints near the valve must be done before connecting any piping to the valve. Always leave at least 6" (152 mm) between the valve and joints when soldering pipes that are connected to the valve. Failure to do this could cause damage to the valve.

6. If the optional Quick Pro Connector Kit was purchased please install now. Connect the female threaded end to the bypass valve male threaded connectors. Ensure the water supply and return lines are straight even cuts and free of sharp edges and burrs. Connect the opposite ends of the Quick Pro Connectors to the water supply and return. Fit the female Quick Connect over the pipe and press firmly together so that it is connected fully. It is important that pipe end is flush with the inner rim of the Quick Connect fitting to ensure the connection doesn't leak.
7. Place the unit into the BYPASS position using the Allen Key (included in parts bag). It is normal for the BYPASS valves to be tight and will loosen with a few turns back and forth.
8. Connect the Drain Line to the Drain Elbow Assembly and secure with a hose clamp. Use a Minimum 1/2" ID pipe or tubing for the Drain Line. Run the Drain Line to the nearest drain or laundry tub. Secure the Drain Line at the drain site to ensure it cannot move. Drain Line should not exceed 30ft. The Drain Line can either be run along the floor or up overhead (for an overhead length in excess of 20ft it is recommended to increase the hose size to a minimum 3/4" ID). ENSURE THE CONNECTION TO THE DRAIN HAS A 1.5" AIR GAP BETWEEN THE END OF THE HOSE AND THE WATER LEVEL OF THE DRAIN TO ENSURE BACKFLOW INTO THE SYSTEM DOES NOT OCCUR. CHECK THE LOCAL AIR GAP CODE FOR PROPER DRAIN LINE INSTALLATION.
9. Place the clear Tube Insert (Included in parts bag) into the Brine Line and connect it to the Brine Elbow Assembly located on Control Valve. Ensure all items are connected correctly and securely to prevent leaking.
10. Slowly turn on the main water supply. Turn on the nearest treated cold water tap and let the water run for a few minutes until the system is free of any air or foreign debris resulting from the plumbing work.
11. Proceed to the Start-Up Instructions on page 10.

Free Manual PDF downloaded from: https://watersoftenerplus.com/manuals/_pdf//manual.pdf
Back to product page: https://watersoftenerplus.com

Installation Twin Tank

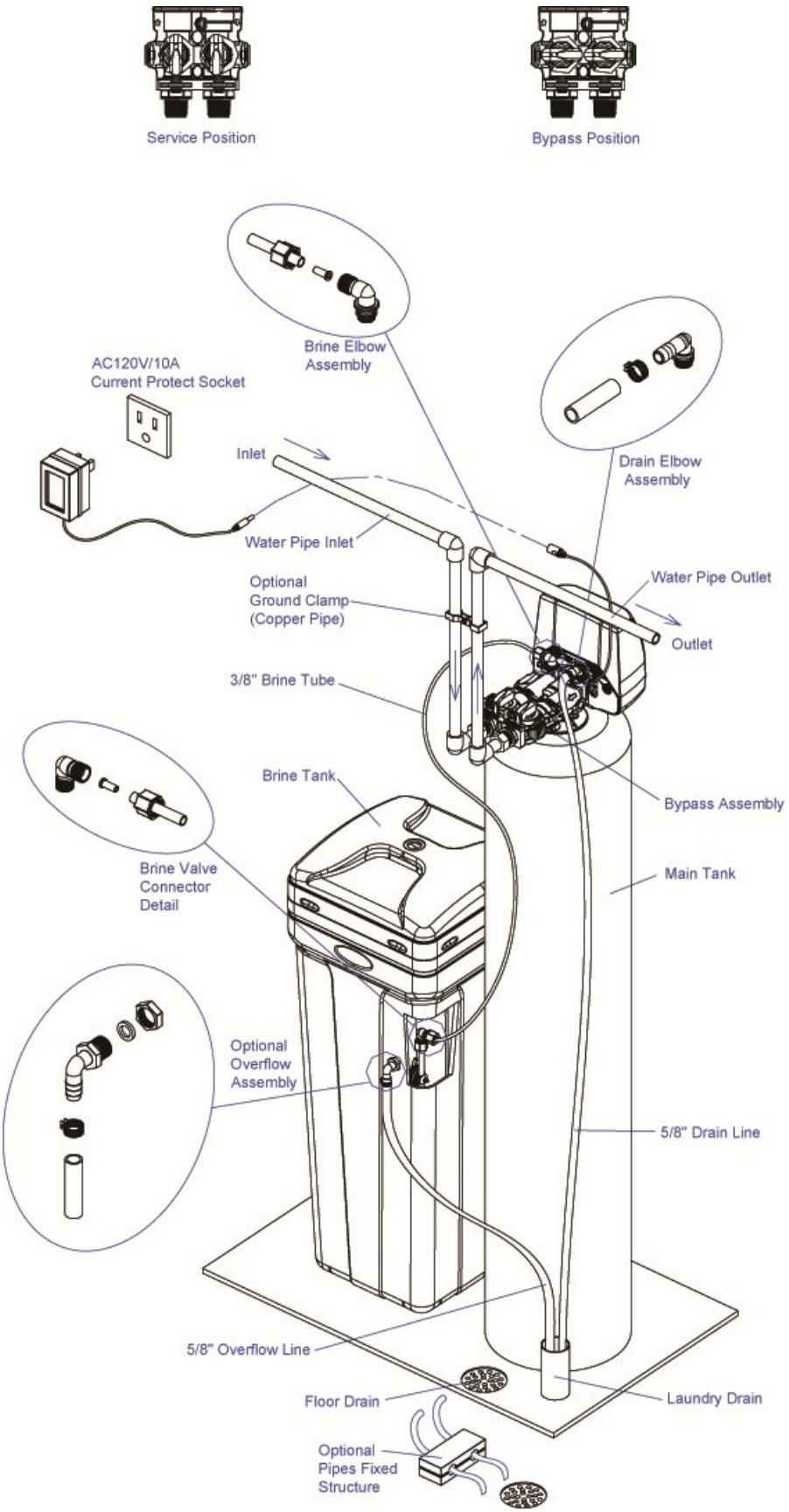

Free Manual PDF downloaded from: https://watersoftenerplus.com/manuals/_pdf//manual.pdf
Back to product page: https://watersoftenerplus.com

Installation Cabinet

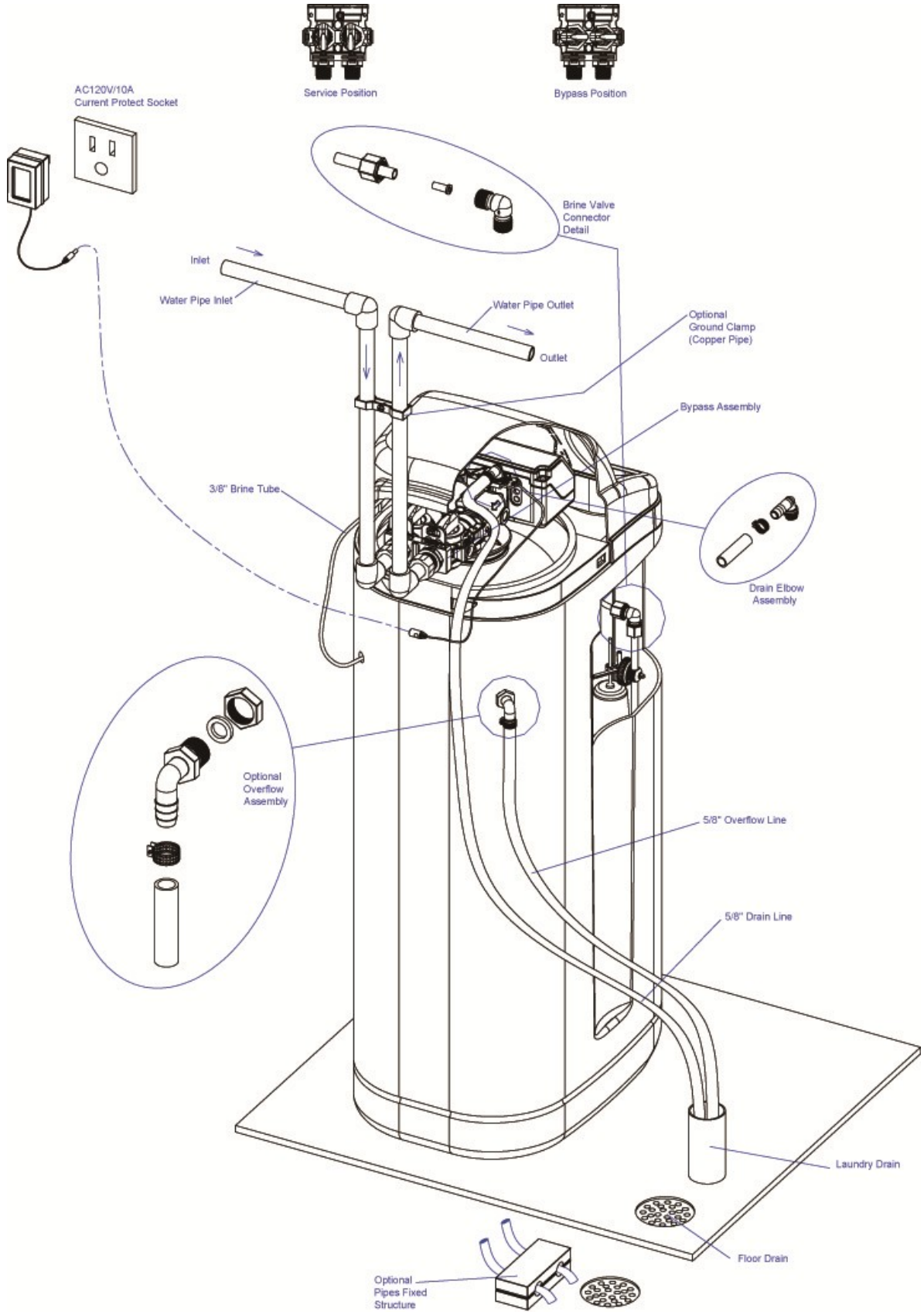

Free Manual PDF downloaded from: https://watersoftenerplus.com/manuals/_pdf//manual.pdf
Back to product page: https://watersoftenerplus.com

System Start-Up

Key Pad Configuration

SETTINGS	This function is to enter the basic setup information required at the time of regeneration.
MANUAL REGEN	This function is to initiate an immediate or delayed manual regeneration.
DOWN / UP	Increase or decrease the value of the settings while in the programming mode.

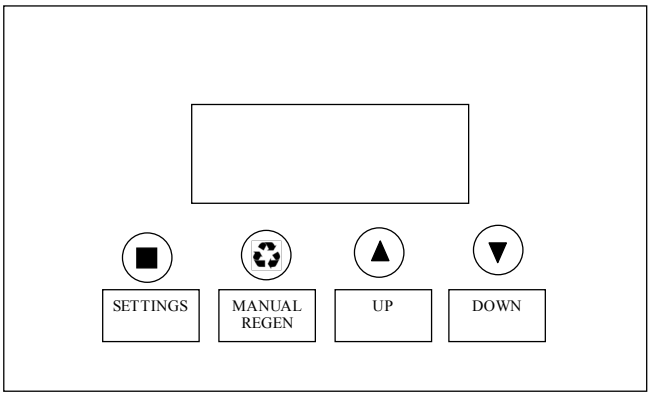

Manual Regeneration (Step/Cycle Valve)

DELAYED REGENERATION

Press and release the MANUAL REGEN button to set a delayed regeneration that will occur at the pre-set regeneration time.The main display page will show DELAYED REGEN ON. To cancel press and release the MANUAL REGEN. Button. The main display page will show DELAYED REGEN OFF.

IMMEDIATE REGENERATION

To start an immediate regeneration (or step valve through each position), press and hold the MANUAL REGEN. Button for 3 seconds (until beeps). The valve will start an immediate regeneration. Press any key to skip to the next cycle.

Start-Up Instructions

1. Add 5 gallons of water and at least 40lbs of water softener salt to the Brine Tank for the initial fill. Due to the efficiency of the system the Refill amount will be considerably less than the initial fill and the refill of previous softeners.
2. Plug the Power Transformer into an approved power source and connect it to the valve. The screen may display "INITIALIZING WAIT PLEASE" while it finds the service position.
3. Press and hold the MANUAL REGEN button for 5 seconds. After the BRINE cycle begins counting down press any button to skip the BRINE cycle. Once in the BACKWASH or RINSE cycle slowly open the inlet on the bypass valve and allow water to enter the unit. Allow all air to escape the unit before turning on water fully. Allow the system to run the complete BACKWASH or RINSE cycle to flush out all media fines from the new resin.
4. The system will automatically advance to the REFILL cycle. Check that water is running into the Brine Tank. Allow the refill to run the full amount of time to ensure a proper brine solution for the regeneration. Due to the efficiency of the unit the brine tank refill will be only 1-2 inches above the salt grid. The water level may not be visible. Check the Brine Well for water level inspection.
5. Upon completion of the Refill cycle the valve will automatically advance to the SERVICE position. Open the outlet valve on the BYPASS. Open the nearest treated water faucet and allow the water to run until clear.
6. Proceed to the Programming Instructions on page 11.

Free Manual PDF downloaded from: https://watersoftenerplus.com/manuals/_pdf//manual.pdf
Back to product page: https://watersoftenerplus.com

Programming Instructions

Settings

Press SETTINGS key (3 SECONDS / BEEP)

VALVE MODE SOFTENER UF
TIME OF DAY 12:01 PM
YEAR 2012
MONTH AUGUST
DAY 21
SET HARDNESS 20 GRAINS
SET PEOPLE 4
SALT SETTING HIGH EFFICIENCY ***STANDARD*** IRON & MN
WATER TYPE MUNICIPAL ***WELL / OTHER***
REGEN TIME 2:00 AM
PROGRAMMING COMPLETE

TIME OF DAY, YEAR, MONTH, DAY,

Time of day is for normal operation of system and the scheduling of the regeneration time. The date is used in a diagnostic function to track the last time the system regenerated.

SET HARDNESS

This value is the maximum compensated water hardness in grains per gallon of the raw water supply. It is used to calculate the system capacity. Add 5 GPG for every 1 PPM Ferrous Iron present in the water.

SET PEOPLE

This value is the number of people living in the home. It is used to calculate the amount of water needed for daily use and the reserve capacity of the system.

SALT SETTING

Standard Setting is highly recommended by the manufacturer for this model.

High Efficiency will utilize 3lbs of salt per cubic foot of resin. It is highly recommended that this setting is only used for water hardness levels below 12 GPG, 0 PPM of iron and when the salt grid is removed from the brine tank.

Standard will utilize 6lbs of salt per cubic foot of resin. Recommended setting for capacity effectiveness and regeneration frequency.

Iron and MN will utilize 12lbs of salt cubic foot of resin. A resin cleaner may also be needed to properly clean the resin when higher iron levels (3 to 5ppm) are present.

WATER TYPE

This setting will determine if the BACKWASH OVERIDE function will be on or off. Select MUNICIPAL if the water source is clean (<1NTU turbidity) and the system will skip the back wash cycle based on the setting in BACKWASH OVERIDE.

Select WELL / OTHER if any Iron or Manganese is present or if the water source is not clean (< 1NTU turbidity). The system will back wash every time.

REGEN TIME

This setting determines the time of day to perform a scheduled regeneration.

FIRST REGEN

After all installation and programming are completed wait 6 hours and then perform a manual regeneration (press and hold REGEN button until it beeps - about 3 seconds). After the regeneration is completed the system will supply soft water.

Free Manual PDF downloaded from: https://watersoftenerplus.com/manuals/_pdf//manual.pdf
Back to product page: https://watersoftenerplus.com

About The System

Control Operation During A Power Failure

In the event of a power failure, the valve will keep track of the time and day for 48 hours. The programmed settings are stored in a non-volatile memory and will not be lost during a power failure. If power fails while the unit is in regeneration, the valve will finish regeneration from the point it is at once power is restored. If the valve misses a scheduled regeneration due to a power failure, it will queue a regeneration at the next regeneration time once power is restored.

Safety Float

The brine tank is equipped with a safety float which prevents your brine tank from overfilling as a result of a malfunction such as a power failure.

Main Display

The main display page will pause on the Date and Time page for 5 seconds. Then it will continually scroll through all of the system diagnostic display pages. Depending on the Valve Type some pages will not be displayed. To manually scroll through the diagnostics, press the down or up key. To reset the TOTAL REGENS, TOTAL GALLONS OVER RUN TOTAL, or PEAK flow rates, press and hold the MENU until the value changes to zero.

PARAMETER	DESCRIPTION
JULY/17/2012 8:30 PM	Month, Day, Year, Time
TOTAL 1,500 GAL REMAIN 1,200 GAL	The total amount is the system capacity when fully regenerated. The remaining is the capacity left in the system.
PEOPLE 2 RESERVE 150 GAL	Number of people in the household and the calculated reserve capacity. When remaining reaches reserve capacity a regeneration will be scheduled.
EST. DAYS TO NEXT REGEN 06 DAYS	The estimated number of days until the next regeneration will occur.
LAST REGEN 9/24/12	The date of the last regeneration.
TOTAL REGENS 10	The total number of regenerations.
TOTAL GALLONS 001590 GAL	The total amount of gallons treated by the system.
OVER RUN TOTAL 0500 GAL	The total amount of water that has exceeded the system capacity over the last 4 regenerations. When remaining goes to zero, the gallons used will be added to over run total.
CURRENT 1.5 GPM PEAK 6.5 GPM	The current flow rate and the peak flow rate since the last regeneration.
DELAYED REGEN OFF	Advises whether a delayed regeneration has been scheduled manually or automatically.
REGEN TIME 2:00 AM	The current setting for regeneration time.
REFILL TIME 3:00 MIN	The current calculated refill time.
VALVE MODE SOFTENER UF	The current setting of the valve mode.

New Sounds

You may notice new sounds as your water softener operates. The regeneration cycle lasts up to 180 minutes. During this time, you may hear water running intermittently to the drain.

Free Manual PDF downloaded from: https://watersoftenerplus.com/manuals/_pdf//manual.pdf
Back to product page: https://watersoftenerplus.com

Upflow Brining Regeneration Process

When the system capacity is nearly exhausted, a regeneration is necessary to restore the system to full capacity. The table below explains the regeneration steps.

Step	Name	Description
#1	Brine	The brine solution is introduced slowly to the bottom of the tank flowing up through the ion exchange resin pushing the hardness out to drain and restoring system capacity.
#2	Back Wash	Fresh water is introduced to the bottom of the tank flowing upwards expanding the ion exchange resin to rinse out any dirt or small particles to the drain and to un-compact the bed to restore full service flow rates.
#3	Rinse	Fresh water is introduced from the top of the tank down flowing down through the ion exchange resin rinsing any excess brine solution out to the drain.
#4	Refill	A fixed amount of soft water is added to the salt tank to prepare and insure fully saturated brine for the next regeneration.

Automatic Hard Water Bypass During Regeneration

The regeneration cycle can last 30 to 180 minutes, after which soft water service will be restored. During regeneration, hard water is automatically bypassed for use in the household. Hot water should be used as little as possible during this time to prevent hard water from filling the water heater. This is why automatic regeneration is set for sometime during the night and manual regenerations should be performed when little or no water will be used in the household.

Normal regeneration time is 2:00 AM.

System Configuration

UPFLOW System Configuration			
Tank Size (Diameter)	Injector Set	Brine Line Flow Control (BLFC)	Drain Line Flow Control (DLFC)
8"	#0000 Black	0.20 GPM	#1 (1.5 GPM)
9"			#2 (2.0 GPM)
10"			#3 (2.4 GPM)
12"	#00 Purple		#5 (3.5 GPM)
13"	#0 Red		#6 (4.0 GPM)
14"	#1 WHITE		#A (5.0 GPM)

Free Manual PDF downloaded from: https://watersoftenerplus.com/manuals/_pdf//manual.pdf
Back to product page: https://watersoftenerplus.com

Manual Bypass

In the case of emergency, such as an overflowing brine tank, you can isolate your water softener from the water supply using the bypass valve located at the back of the control. In normal operation the bypass is open with the on/off knobs in line with the inlet and outlet pipes.

To isolate the softener, simply rotate the knobs counter clockwise (as indicated by the word BYPASS and arrow) until they lock. You can use your water related fixtures and appliances as the water supply is bypassing the softener. However, the water you use will be hard. To resume soft water service, open bypass valve by rotating the knobs counterclockwise.

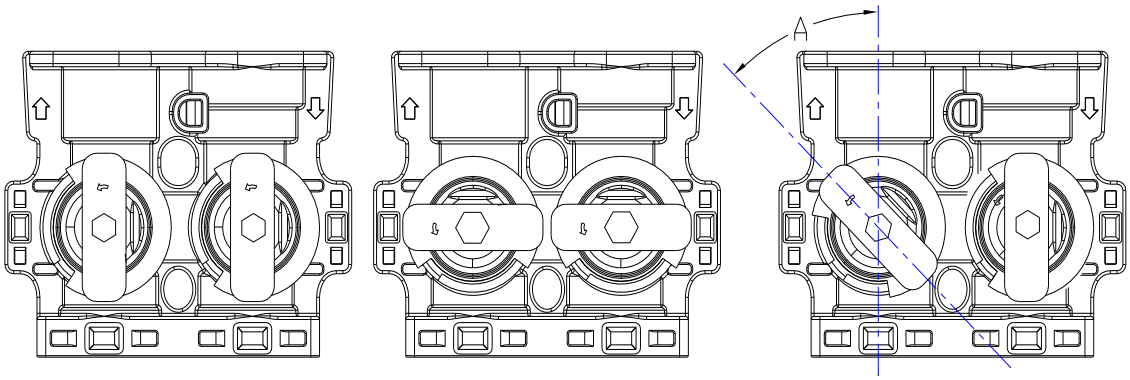

Maintenance

Adding Salt

Use only water softener salt. Check the salt level monthly. It is important to maintain the salt level above the water level. To add salt, simply lift the salt lid and add the salt directly into the brine tank. Be sure the brine well cover is on and fill only to the height of the brine well.

Bridging

Humidity or using the wrong type of salt may create a cavity between the water and the salt. This action, known as "bridging", prevents the brine solution from being made, leading to your water supply being hard.

If you suspect salt bridging, carefully hit on the outside of the brine tank or pour some warm water over the salt to break up the bridge. Allow four hours to produce a brine solution and then perform a manual regeneration of the softener system.

Free Manual PDF downloaded from: https://watersoftenerplus.com/manuals/_pdf//manual.pdf
Back to product page: https://watersoftenerplus.com

Cleaning or Replacing Injectors

Sediment, salt and silt will restrict or clog the injector. A clean water supply and pure salt (99.5%) will prevent this from happening.

The injector assembly is located on the right side of the control valve. This assembly is easy to clean.

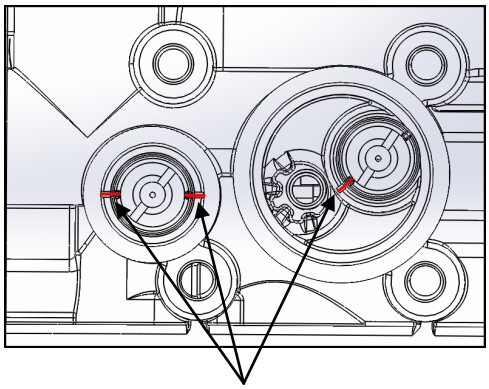

TIP: There are marks on the injector holder that must be lined up to the marks on the valve to fully insert the holder into the hole in the valve body

TIP: Place the o-rings A25 and A26 onto the valve before installing A33.

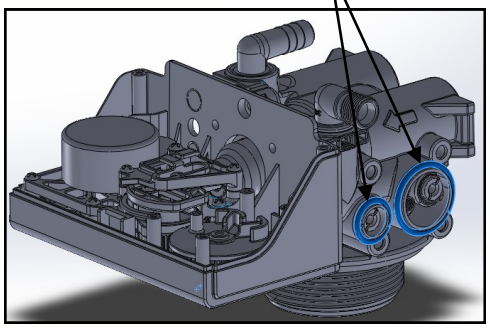

1. Shut off the water supply to your softener by closing the inlet side of the bypass valve. Reduce the system pressure by opening a cold soft water faucet.
2. Using a screwdriver, remove the four screws holding the injector cover to the control valve body.
3. Carefully remove the assembly and disassemble as shown in above figure.
4. The injector orifice is removed from the valve body by carefully turning it out with a large screwdriver. Remove the injector throat the same way.
5. Carefully flush all parts including the screen. Use a mild acid such as vinegar or Pro-Rust Out to clean the small holes in the orifice and throat.
6. Reassemble using the reverse procedure.

Free Manual PDF downloaded from: https://watersoftenerplus.com/manuals/_pdf//manual.pdf
Back to product page: https://watersoftenerplus.com

Main Repair Parts

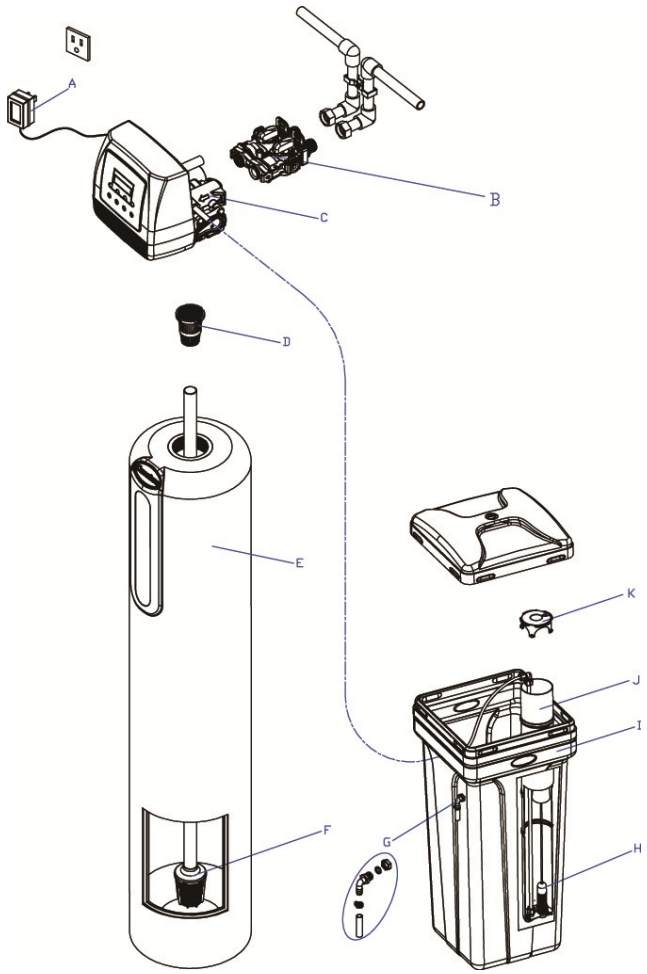

REPLACEMENT PARTS - TWIN TANK			
Replacement Part Number	Part Description	DWG #	Quantity
60010052	POWER TRANSFORMER 120V-12V	A	1
60010002	BYPASS / METER	B	1
10010060	485 UP FLOW VALVE	C	1
60010048	TOP CONE	D	1
25020041	844 TANK (75)	E	1
25020042	948 TANK (100)	E	1
25020043	1054 TANK (150)	E	1
25010058	1252 TANK (200)	E	1
25030007	1465 TANK (300)	E	1
50010005	DISTRIBUTOR 1X54	F	1
60010005	OVER FLOW FITTING ASSEMBLY	G	1
55010023	SAFETY / AIR CHECK ASSEMBLY	H	1
30020006	BRINE TANK BTR-100 (75,100,150)	I	1
30020011	BRINE TANK BTR-145 (200)	I	1
30020032	BRINE TANK BTR-200 (300)	I	1
55010010	BRINE WELL & CAP	J&K	1

Free Manual PDF downloaded from: https://watersoftenerplus.com/manuals/_pdf//manual.pdf
Back to product page: https://watersoftenerplus.com

Main Repair Parts - Connectors

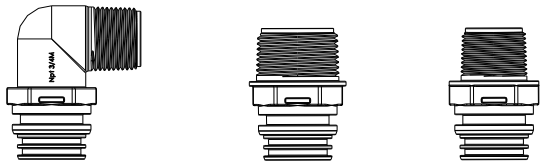

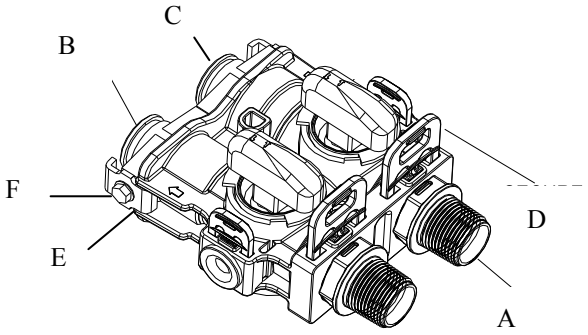

REPLACEMENT PARTS - CONNECTORS			
Replacement Part Number	Part Description	DWG #	Quantity
60010020	3/4" NPT ELBOW	A	2
60010019	1" NPT STRAIGHT	A	2
60010023	3/4" NPT STRAIGHT	A	2
60010079	VALVE COUPLING INLET	B	1
60010101	VALVE COUPLING OUTLET (METER SIDE)	C	1
60010025	PLASTIC SECURE CLIP	D	2
60010046	BYPASS SS CLIP	E	2
60010047	BYPASS SS SCREW	F	2

Free Manual PDF downloaded from: https://watersoftenerplus.com/manuals/_pdf//manual.pdf
Back to product page: https://watersoftenerplus.com

Control Valve Exploded View

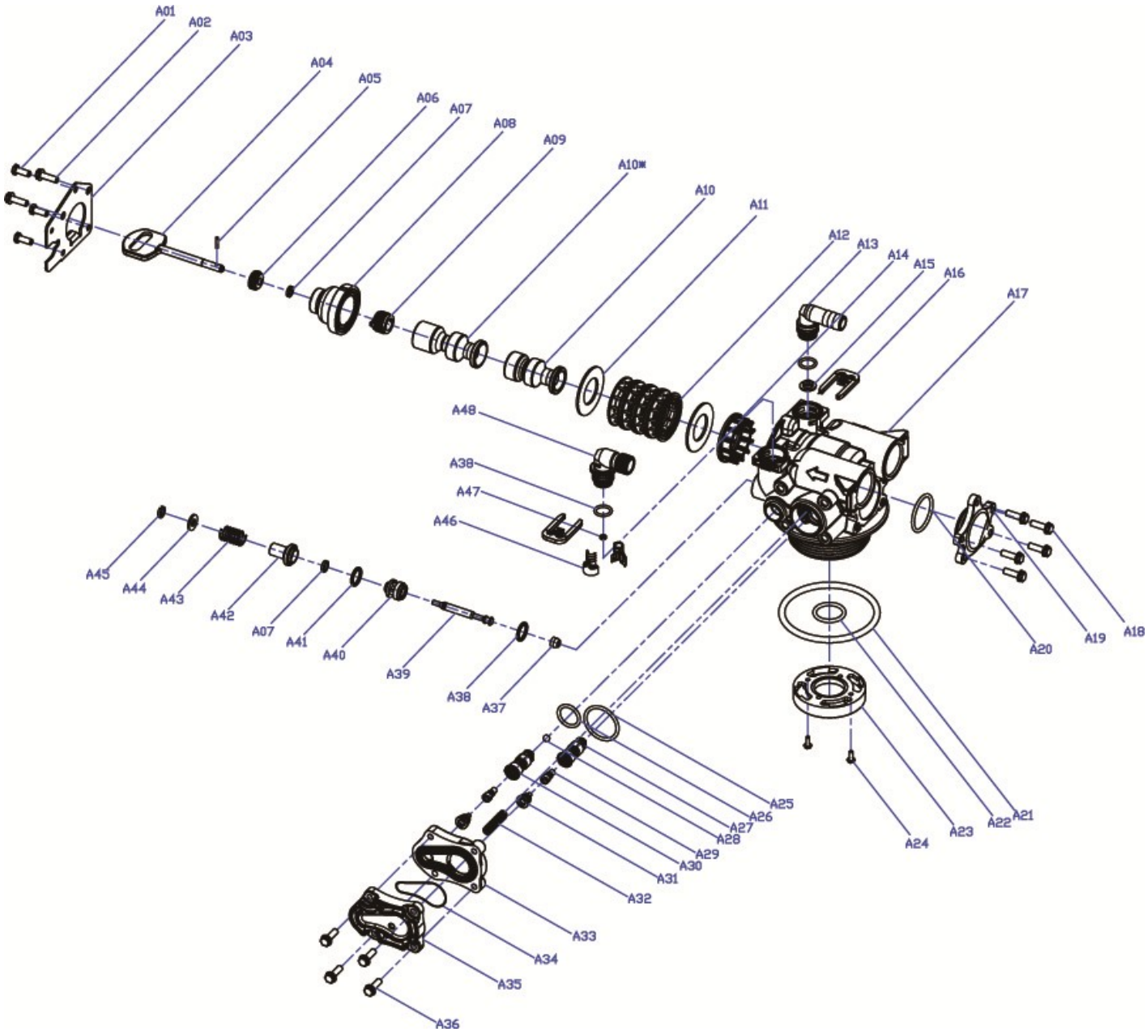

VALVE REPAIR PARTS LIST			
Replacement Part Number	Part Description	Replacement Part Number	Part Description
60010127	INJECTOR SET #0000 BLACK	60010129	85HE UPFLOW PISTON ASSEMBLY
60010126	INJECTTOR SET #000 GREY	60010171	85HE DOWNFLOW PISTON ASSEMBLY
60010035	INJECTOR SET #00 VIOLET	60010130	85HE SEAL & SPACER KIT
60010034	INJECTOR SET #0 RED	60010131	85HE DLFC #1 1.5 GPM
60010033	INJECTOR SET #1 WHITE	60010132	85HE DLFC #2 2.0 GPM
60010032	INJECTOR SET #2 BLUE	60010133	85HE DLFC #3 2.4 GPM
60010031	INJECTOR SET #3 YELLOW	60010135	85HE DLFC #5 3.5 GPM
60010128	BLFC 0.2 GPM	60010136	85HE DLFC #A 5.0 GPM
60010110	BLFC 0.3 GPM	60010137	85HE DLFC #B 7.0 GPM
60010082	BLFC 0.7 GPM	60010138	85HE DLFC #C 10.0 GPM

Free Manual PDF downloaded from: https://watersoftenerplus.com/manuals/_pdf//manual.pdf
Back to product page: https://watersoftenerplus.com

Control Valve Parts List

CONTROL VALVE (UPFLOW)				
Replacement Part Number	MFG Part Number	Part Description	DWG #	Quantity
	5056087	Screw-M5x12(Hexagon)	A01	3
	5056088	Screw-M5x16(Hexagon With Washer)	A02	2
	5056047	End Plug Retainer	A03	1
	5031016	BNT85HE Piston Rod	A04	1
	5056097	Piston Pin	A05	1
	5031015	BNT85HE Quad Ring Plug Cover	A06	1
	5056070	Quad Ring	A07	2
	5031011	BNT85HE End Plug	A08	1
	5031014	BNT85HE Piston Retainer	A09	1
	5057002	BNT85HE Piston(Electrical Upflow)	A10*	1
	5056073	Seal	A11	5
	5056021	Spacer	A12	4
60010074	5010082	Drain Fitting-B	A13	1
	5031005	BNT85HE Spacer	A14	1
	5056186	DLFC-2#	A15	1
60010069	5056172	Secure Clip-s	A16	2
	5031002	BNT85HE Valve Body	A17	1
	5056508	Screw-M5x12(Hexagon With Washer)	A18	5
	5030004	BNT85 End Cover	A19	1
	5030013	O-Ring-¢30×2.65	A20	1
	5056063	O-Ring-¢78.74×5.33	A21	1
	26010103	O-Ring-¢25×3.55	A22	1
	7060007	Valve Bottom Connector	A23	1
	13000426	Screw-ST2.9X13(Large Washer)	A24	2
	5031022	O-Ring-¢32×3	A25	1
	5031021	O-Ring-¢18×3	A26	1
60010174	5031013	Injector Plug Body	A27	1
	30040089	Injector Throat	A29	2
60010175	5031012	BNT85HE Injector Fixed Sleeve	A30	1
	30040090	Injector Nozzle	A31	2
	5056103	Injector Screen	A32	1
	5031003	BNT85HE Injector Cover Body	A33	1
	5031018	O-Ring-¢40×2.65	A34	1
	5031004	BNT85HE Injector Cover Cap	A35	1
	5031027	Screw-M5x25(Hexagon With Washer)	A36	4
	5056075	Seal Mat	A37	1
	5056134	O-Ring-¢12×2	A38	3
	5056054	Injector Stem	A39	1
	5056031	Injector Spacer	A40	1
	5056081	O-Ring-¢12.5×1.8	A41	1
	5056030	Injector Cap	A42	1
	5056093	Injector Screen	A43	1
	5010049	Special Washer	A44	1
	5056105	Retaining Ring	A45	1
60010173	5031010	BNT85HE BLFC Fixed Sleeve	A46	2
	5056076	BLFC-2#	A47	1
60010172	5005629	Injector Fitting(3/8".Elbow)	A48	1

Free Manual PDF downloaded from: https://watersoftenerplus.com/manuals/_pdf//manual.pdf
Back to product page: https://watersoftenerplus.com

Power Head Exploded View

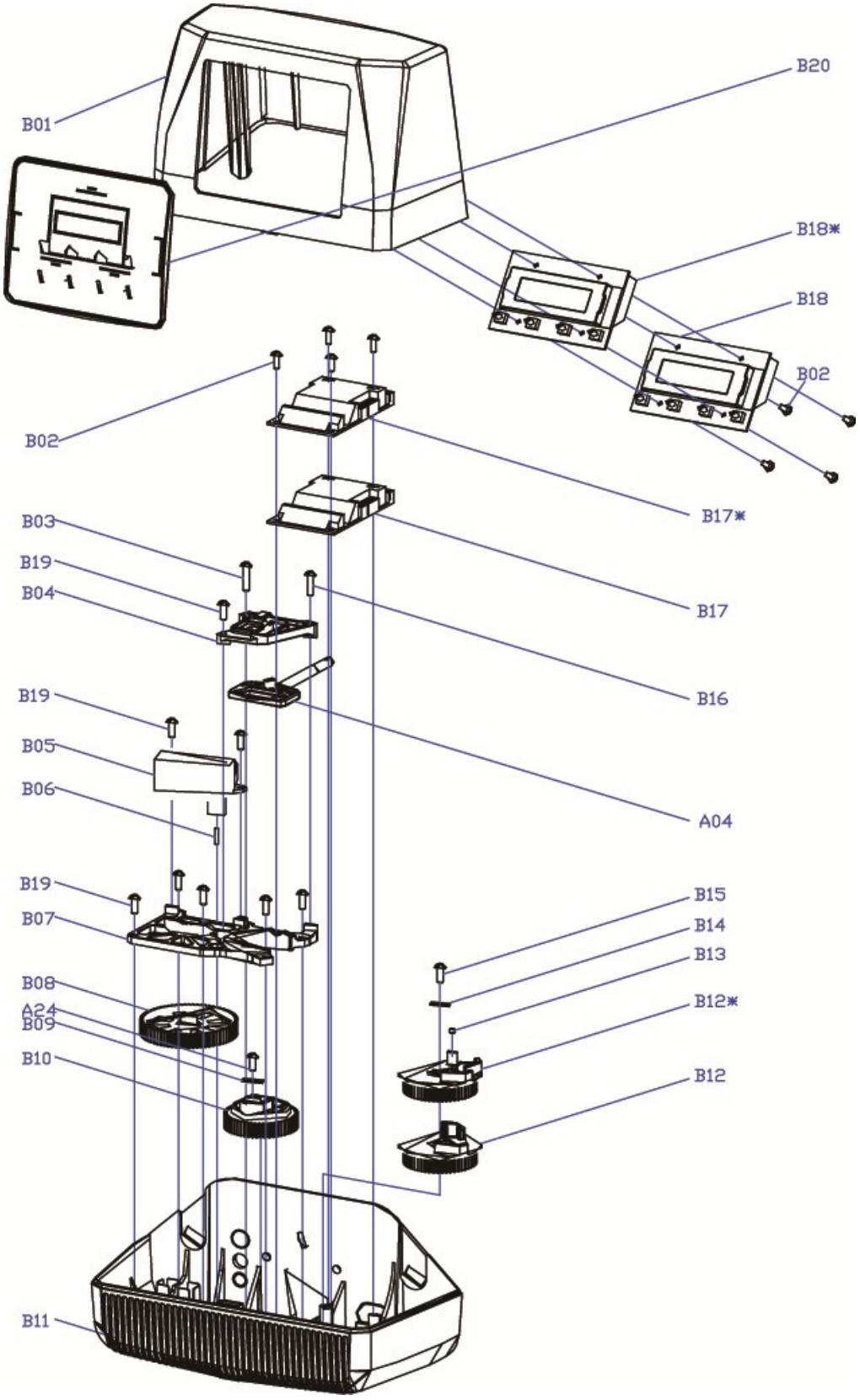

Free Manual PDF downloaded from: https://watersoftenerplus.com/manuals/_pdf//manual.pdf
Back to product page: https://watersoftenerplus.com

Power Head Parts List

POWER HEAD (UPFLOW)				
Replacement Part Number	MFG Part Number	Part Description	DWG #	Quantity
	5056084	Screw-ST3.5X13	B01	10
	5010037	Screw-ST2.9X10	B02	9
	13000416	Screw-ST3.5X25	B03	1
	5031007	BNT85HE Piston Rod Guide Plate	B04	1
	5056510	Motor-12v/2rpm	B05	1
	5030014	Motor Power Cable		1
	11700005	Wire Connector		2
	5056098	Motor Pin	B06	1
	5031006	BNT85HE Mounting Plate	B07	1
	5030009	BNT85 Drive Gear	B08	1
	13000426	Screw-ST2.9X13(Large Washer)	A24	2
	5056139	Washer-3x13	B09	1
	5030007	BNT85 Main Gear	B10	1
	5030005	BNT85 Mounting	B11	1
	5031009	BNT85HE Brine Gear(Upflow)	B12*	1
	5010023	Magnet(3×2.7)	B13	1
	5056141	Washer-4x12	B14	1
	5056166	Screw-ST4.2X12(Large Washer)	B15	1
	5031016	BNT85HE Piston Rod	A04	1
	5010036	Screw-ST3.5X16	B16	1
	5031025	BNT85HE Main Pcb(Upflow)	B17*	1
	5010031	Meter Assembly		1
	5010046	Meter Strain Rlief		1
	5010029	Power Cable		1
	5010035	Power Strain Rlief		1
	19010105	Wire Rope-3×100		2
	5031023	BNT85HE PCB (Upflow)	B18*	1
	5030021	BNT85 Wiring Harness		1
	5030032	BNT185 Cover	B19	1
	5030033	BNT185 Display Plate	B20	1

Free Manual PDF downloaded from: https://watersoftenerplus.com/manuals/_pdf//manual.pdf
Back to product page: https://watersoftenerplus.com

Trouble Shooting

Issue	Possible Cause	Possible Solution
A. Unit fails to initiate a regeneration cycle.	1. No power supply.	Check electrical service, fuse, etc.
	2. Defective circuit board.	Replace faulty parts.
	3. Power failure.	Reset time of day.
	4. Defective meter.	Replace turbine meter.
B. Water is hard.	1. By-pass valve open.	Close by-pass valve.
	2. Out of salt or salt level below water level.	Add salt to tank.
	3. Plugged injector / screen.	Clean parts.
	4. Flow of water blocked to brine tank.	Check brine tank refill rate.
	5. Hard water in hot water tank.	Repeat flushing of hot water tank required.
	6. Leak between valve and central tube.	Check if central tube is cracked or o-ring is damaged. Replace faulty parts.
	7. Internal valve leak.	Replace valve seals, spacer, and piston assembly.
	8. Reserve capacity setting too low.	Increase reserve capacity.
	9. Not enough capacity.	Increase salt dosage.
C. Salt use is high.	1. Refill time is too high.	Check refill time setting.
	2. Defective flow control.	Replace.
D. Low water pressure.	1. Iron or scale build up in line feeding unit.	Clean pipes.
	2. Iron build up inside valve or tank.	Clean control and add resin cleaner to clean bed. Increase regeneration frequency.
	3. Inlet of control plugged due to foreign material.	Remove piston and clean control valve.
	4. Deteriorated resin. (Maybe caused from high chlorine or chloramines.)	Re-bed unit. Consider adding carbon pre-treatment.
E. Resin in drain line.	1. Air in water system.	Check well system for proper air eliminator control.
	2. Incorrect drain line flow control (DLFC) button.	Check for proper flow rate.
F. Too much water in brine tank.	1. Plugged injector or screen.	Clean parts.
	2. Valve not regenerating.	Replace circuit board, motor, or control.
	3. Foreign material in brine valve.	Clean parts.
	4. Unit not drawing brine.	Check for vacuum leak in brine line connections.
G. Unit fails to draw brine.	1. Drain line flow control is plugged.	Clean parts.
	2. Injector or screen is plugged.	Clean parts.
	3. Inlet pressure too low.	Increase pressure to 25 PSI.
	4. Internal valve leak.	Replace seals, spacers, and piston assembly.
	5. Safety valve closed.	Check for leak in brine line connections. Replace safety float assembly.
	6. Vacuum leak in brine line.	Check for leak in brine line connections. Tighten all connections.
	7. Drain line has kink in it or is blocked.	Check drain line.
H. Valve continuously cycles.	1. Defective position sensor PCB.	Replace faulty parts.
I. Flow to drain continuously.	1. Valve settings incorrect.	Check valve settings.
	2. Foreign material in control valve.	Clean control.
	3. Internal leak.	Replace seals, spacers, and piston assembly.
	4. Piston is stuck in position. Motor may have failed or gears have jammed or disengaged.	Check for power to motor. Check for loose wire. Check for jammed gears or gears disengaged. Replace faulty parts.
J. Valve makes beeping sound.	1. The piston has not advanced to the next cycle position properly.	Check for power to motor. Check for loose wire. Check for jammed gears or gears disengaged.

Free Manual PDF downloaded from: https://watersoftenerplus.com/manuals/_pdf//manual.pdf
Back to product page: https://watersoftenerplus.com

Warranty

Discount Water Softeners, Inc. warrants that your new water conditioner is built of quality material and workmanship. When properly installed and maintained the system will provide years of trouble free service.

Seven/Ten Year Limited Warranty on Control Valve

Discount Water Softeners, Inc. will replace any part which fails within 84 months (Upflow)/120 months (Premier) from date of manufacture, as indicated by the serial number, provided the failure is due to a defect in material or workmanship. The only exception shall be when proof of purchase is provided. If proof of purchase is unable to be provided the warranty period will be effective from the date of manufacturing.

Ten Year Limited Resin Warranty (Premier Only)

Discount Water Softeners, Inc. warrants that for ten (10) years from the date of purchase, we will replace the softening resin that has failed at no charge (Shipping Fees not included). Resin damage caused by water conditions will not be covered.

Life Time Guarantee on Mineral Tanks and Brine Tanks

Discount Water Softeners, Inc. will provide a replacement mineral tank or brine tank to any original equipment purchaser in possession of a tank that fails provided that the water conditioner is at all times operated in accordance with specifications and not subject to freezing.

General Conditions

Damage to any part of this water conditioner or filter as a result of misuse, misapplication, neglect, alteration, accident, installation or operation contrary to our printed instructions, damage to ion exchange resin and seals caused by chlorine / chloramines in the water supply, or damage caused by any force of nature is not covered in this warranty. We will repair or replace defective parts if our warranty department determines it to be defective under the terms of this warranty. Discount Water Softeners, Inc. assumes no responsibility for consequential damage, labor or expense incurred as a result of a defect or failure.

Free Manual PDF downloaded from: https://watersoftenerplus.com/manuals/_pdf//manual.pdf
Back to product page: https://watersoftenerplus.com