CLEARWATER II D.E. FILTER INSTRUCTIONS

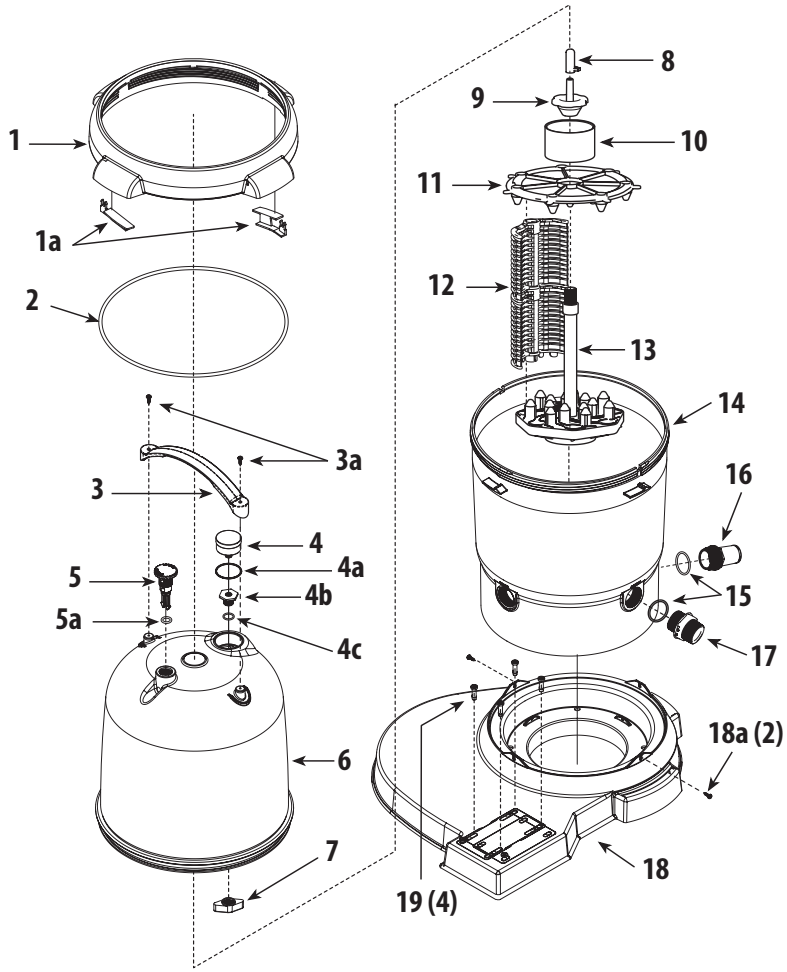

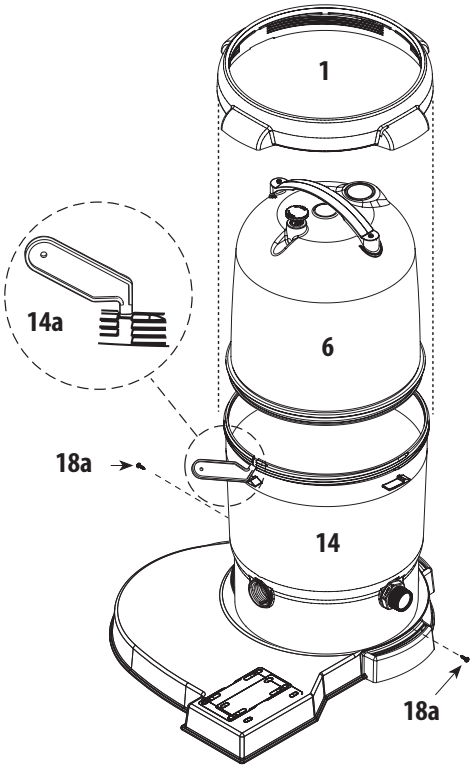

CLEARWATER II D.E. FILTER REPLACEMENT PARTS

Item	Part No.	Description
1	**718-7251**	Filter Locknut Assembly
1a	**519-7451**	Handle Assembly (2)
2	**805-0460**	Lid O-Ring
3	**519-7601**	Lid Handle
3a	**819-9002**	#12 x ¾ S/S Phillips Head Screws
4	**830-4000SS**	Pressure Gauge
4a	**805-0224**	O-Ring - Air Relief
4b	**519-7430**	Gauge - Fitting Adapter
4c	**805-0117SD**	O-Ring - Adapter
5	**602-0200**	Air Relief Plug
5a	**805-0207**	O-Ring - Air Relief
6	**519-7411**	Lid Assembly (Small)
	519-7401	Lid Assembly (Large)
7	**519-7441**	Wing-Nut
8	**500-7310**	Screen/Sock Assembly
9	**718-7210**	Tie Nut – D.E.

Item	Part No.	Description
10	**419-7241**	Plug - 2 x 1 ½ MPT
11	**519-7269**	Locator – Top Grids – D.E.
12	**550-7210**	Grids – 12 sq. ft. D.E. (7)
	550-7220	Grids – 18 sq. ft. D.E. (7)
13	**550-7100**	Base Assembly – 12 sq. ft.
	550-7120	Base Assembly – 18 sq. ft.
14	**515-7251**	Filter Body Bottom
14a	**519-7470**	Filter Wrench
15	**805-0224**	O-Ring (2)
16	**417-6241**	1 ½ MPT x 1 ½ Male Smooth Hose Adapter
17	**500-5300**	Drain Assembly
18	**672-7401**	ClearWater II Base
18a	**819-0044**	#10 x 1 S/S Phillips Head Screw (2)
19	**429-7221**	Snap Pin (4)

Free Manual PDF downloaded from: https://watersoftenerplus.com/manuals/_pdf//manual.pdf
Back to product page: https://watersoftenerplus.com

INSTRUCTIONS

The Clearwater II D.E. Filter is ideal for new pools or as a replacement for existing pools. The filter tank is constructed of high-strength thermoplastic and reusable D.E. grids. The Clearwater II D.E. Filter will provide years of superior operation and crystal clear, sparkling water.

INSTALLATION INSTRUCTIONS

1. Place filter on a level, secure surface (concrete slab, patio block, etc.). Be sure to position the filter so that the instructions, warnings, and pressure gauge are visible to the operator. Place filter with the side marked "Inlet" facing the pump assembly. Also, position the filter so that the piping connections and drain port are convenient and accessible for servicing and winterizing. Provide sufficient clearance around filter to permit visual verification that all connections are properly installed. Provide sufficient space above filter to remove lid for cleaning and servicing. This distance will vary with the model of filter you are installing.
2. Make all plumbing connections in accordance with local plumbing and building codes.
3. Open air release knob. Plug in and turn on pump. Air will pass out of the filter through the air release knob. Once water discharges from knob, close it.

CLEANING INSTRUCTIONS

If the pressure gauge on your filter reads 5 PSI or higher than the original starting pressure, the filter needs to be cleaned. The ClearWater II D.E. Filter System features the exclusive 1-2-3 Safety Locking System to ensure safe and simple filter maintenance.

1. Turn off pump. **WARNING: Never attempt to clean filter while pump is running. This is a pressurized vessel. It could cause severe injury or harm to your person.** Plug skimmer and pool return lines or drain pool water level to below pool return line.
2. Slowly open the air release knob on top of filter until the pressure gauge reads "0". Open drain cap at bottom of filter and allow water to flow.
3. Press the yellow safety latch on the underside of the locking nut and turn the nut counterclockwise to remove the lid. Rinse the D.E. grid(s) with a garden hose. There is no need to remove the grid(s) from the filter.
4. Reassemble lid and follow start-up procedures from original instructions.

My Original Starting Pressure is _____ PSI (Pounds per Square Inch). I should clean the filter at _____ PSI.

WARRANTY

For product registration visit: www.waterwayplastics.com.
For Warranty questions or claims please contact point of purchase.

Designed, Engineered & Manufactured in the USA.

waterway™

2200 East Sturgis Road, Oxnard CA 93030 • Phone 805.981.0262 • Fax 805.981.9403
www.waterwayplastics.com • waterway@waterwayplastics.com

©2025 Waterway Plastics

810-0065.0425

Free Manual PDF downloaded from: https://watersoftenerplus.com/manuals/_pdf//manual.pdf
Back to product page: https://watersoftenerplus.com

D.E. FILTER CLEANING INSTRUCTIONS

WARNING: NEVER ATTEMPT TO CLEAN FILTER WHILE PUMP IS RUNNING. This is a pressurized vessel. It could cause severe injury or harm to your person.

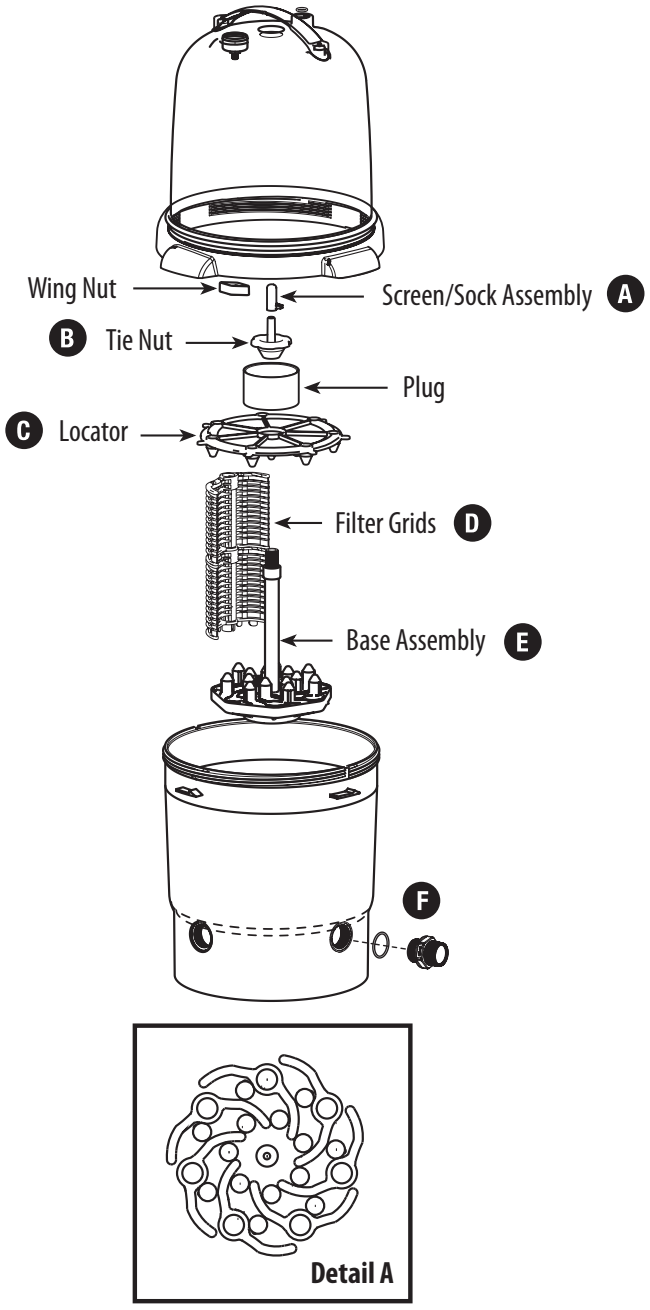

CLEANING INSTRUCTIONS

1. Remove the filter lid.
2. Remove filter drain cap (F).
3. Remove internal filter screen (A). Clean debris from inside of screen area.
4. Unthread tie nut (B). Lift and remove grid locator (C).
5. Gently remove all 7 filter grids (D). Rinse grids off using a low pressure water source.
6. Place clean filter grids (D) on Base Assembly (E). See Detail A for grid alignment on the collector (Top View).
7. Place grid locator (C), tie nut (B) and filter screen (A) in place.

START UP

1. Make sure filter lid is secured to filter bottom.
2. Replace filter drain cap. Open slice valves (if applicable). Open air relief valve.
3. Turn pump on. **Do not stand over or near the filter. Stay at least 10 feet clear from the filter.** When a steady stream of water discharges, shut off the air relief valve.
4. You are now ready to add D.E. to your filter. Diatomaceous Earth (D.E.) is the filter media that will coat the filter grids.
5. **Minimum D.E. needed: Add at least 1 lb. of D.E. for each 10 sq. ft. of filter area: (suggested by Waterway)**

   For FD12 models: 12 sq. ft. / 44 GPM = **1.2 lbs.**
   For FD18 models: 18 sq. ft. / 67 GPM = **1.8 lbs.**

6. Mix the D.E. into a slurry in a pail and add it through the pool skimmer while the filter is running.
7. Your pool is now ready for your enjoyment!

WARRANTY

For product registration visit: www.waterwayplastics.com.
For Warranty questions or claims please contact point of purchase.

Designed, Engineered & Manufactured in the USA.

waterway™

2200 East Sturgis Road, Oxnard CA 93030 • Phone 805.981.0262 • Fax 805.981.9403
www.waterwayplastics.com • waterway@waterwayplastics.com

©2025 Waterway Plastics

810-0105.0425

Free Manual PDF downloaded from: https://watersoftenerplus.com/manuals/_pdf//manual.pdf
Back to product page: https://watersoftenerplus.com

INSTALLATION INSTRUCTIONS FOR ATTACHING CLEARWATER II FILTER LID HANDLE AND REMOVAL OF LID ASSEMBLY

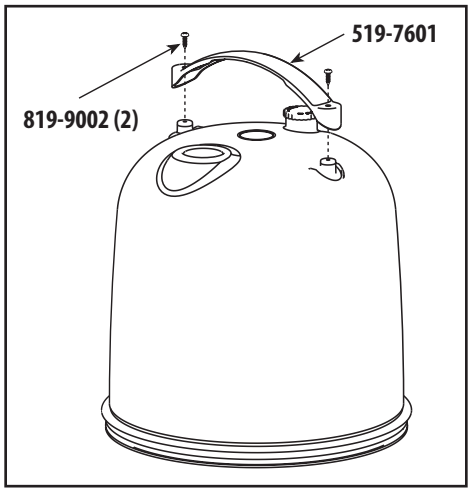

Using a Phillips-head screwdriver, screw the two (2) provided Phillips-head screws through the handle assembly and into the filter lid, as shown. Make snug; DO NOT overtighten.

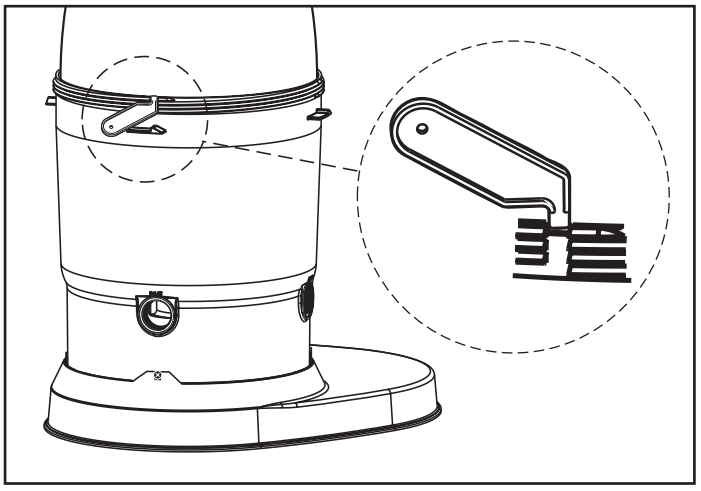

TO REMOVE LID ASSEMBLY:
Remove lock-nut assembly. Insert wrench in notch between filter body and lid assembly as shown. Twist wrench to separate.

INSTALLATION INSTRUCTIONS FOR ATTACHING CLEARWATER II FILTER BODY TO THE CLEARWATER II FILTER BASE

1. Align the drain port of the filter body to the base as shown.
2. Use one of the two self-threading screws provided. Screw it into the filter body as shown.
3. Using the other self-threading screw, screw it into the filter body on the opposite side.
4. Continue the installation of the filter according to the filter instructions.



WARRANTY

For product registration visit: www.waterwayplastics.com.
For Warranty questions or claims please contact point of purchase.

Designed, Engineered & Manufactured in the USA.

waterway™

2200 East Sturgis Road, Oxnard CA 93030 • Phone 805.981.0262 • Fax 805.981.9403
www.waterwayplastics.com • waterway@waterwayplastics.com

©2025 Waterway Plastics

Free Manual PDF downloaded from: https://watersoftenerplus.com/manuals/_pdf//manual.pdf
Back to product page: https://watersoftenerplus.com

Instructions d'installation pour la pose de la poignée du couvercle du filtre ClearWater II et l'enlèvement de l'assemblage du couvercle

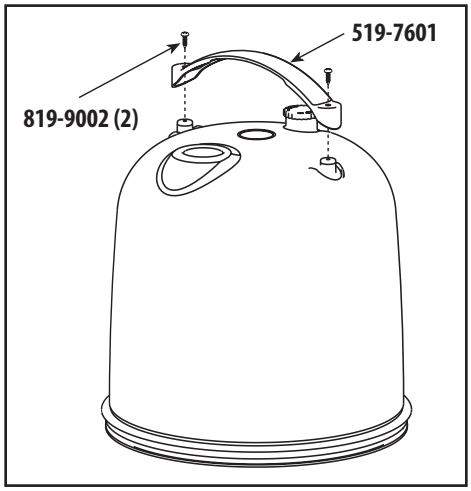

Avec un tournevis Phillips, visser les deux vis Phillips fournies à travers la poignée dans le couvercle du filtre tel que montré (ne pas trop serrer).

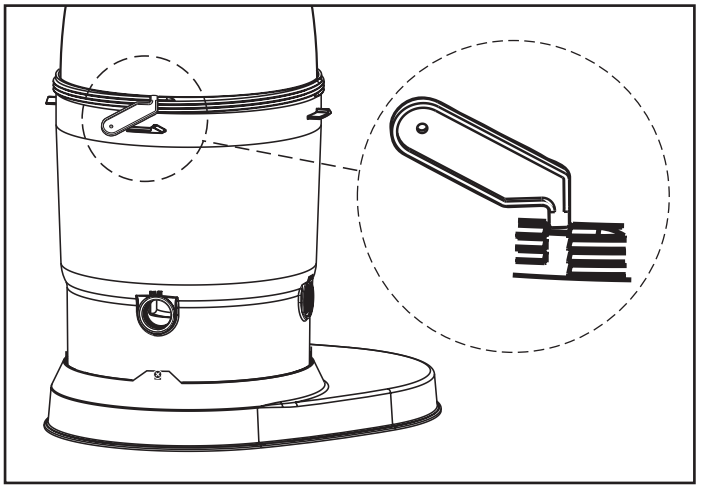

Pour enlever le couvercle :
Enlever l'écrou autobloquant, insérer la clé dansla rainure entre le boîtier et le couvercle du filtre tel que montré et faites pivoter la clé pour les séparer.

Instructions d'installation pour la pose du boîtier du filtre Clearwater II à la base du filtre Clearwater II

1. Aligner la sortie du drain du boîtier du filtre avec la base tel que montré.

2. Utiliser une des deux vis à filetage automatique fournies et la visser dans le boîtier tel que montré.

3. Utiliser l'autre vis à filetage automatique et la visser dans le boîtier, du côté opposé.

4. Continuer l'installation du filtre selon les instructions du filtre.



GARANTIE

Pour l'enregistrement du produit, visitez : www.waterwayplastics.com.
Pour des questions de garantie ou réclamations, veuillez communiquer avec point de vente.

Designed, Engineered & Manufactured in the USA.

waterway™

2200 East Sturgis Road, Oxnard CA 93030 • Phone 805.981.0262 • Fax 805.981.9403
www.waterwayplastics.com • waterway@waterwayplastics.com

©2025 Waterway Plastics

Free Manual PDF downloaded from: https://watersoftenerplus.com/manuals/_pdf//manual.pdf
Back to product page: https://watersoftenerplus.com