DIAMOND STRIP DRAIN OWNER'S MANUAL

For Model Number: 640-134x V • 640-135x V • 640-136x V • 640-137x V

VGBA 2017

⚠ WARNING:

WHEN INSTALLING AND USING THIS EQUIPMENT, BASIC SAFETY PRECAUTIONS SHALL ALWAYS BE FOLLOWED, INCLUDING THE FOLLOWING: "IMPORTANT SAFETY INSTRUCTIONS". READ, UNDERSTAND, AND FOLLOW ALL WARNINGS AND INSTRUCTIONS.

Read and follow all instructions in this owner's manual and on the equipment. Failure to follow instructions can cause severe injury and/or death.

SOFA INSTRUCTIONS

When installing and using this equipment, basic safety precautions shall always be followed, including the following: IMPORTANT SAFETY INSTRUCTIONS. READ, FOLLOW, AND UNDERSTAND ALL INSTRUCTIONS AND WARNINGS.

Any modification that increases the flow rate of the circulation system shall require re-evaluation of the cover/grate and sump to ensure that the flow rating of the Suction Outlet Fitting Assembly (SOFA) is not exceeded.

Missing, broken, or cracked cover/grates, sumps, mud-frames, or any other SOFA component shall be replaced before bathers are allowed to use the pool.

Loose cover/grates shall be reattached before bathers are allowed to use the pool.
SAVE THESE INSTRUCTIONS.

Start installation of screws by hand to ensure proper thread engagement and prevent cross threading.

Replacement cover shall be only used on Waterway sump and mud-rings. All cracked or damaged mud-rings or sumps shall be replaced.

Fasteners shall be replaced with identical ones.

Use either center port or two side ports, join the fixture with approved PVC glue.

Winterization: plug the ports with applicable NPT plugs. Ensure rempval of plugs before operating and using the pool or spa.

IMPORTANT SAFETY INSTRUCTIONS



WARNING - SUCTION ENTRAPMENT HAZARD

Suction in suction outlets and/or suction outlet covers which are damaged, broken, cracked, missing, or unsecured can cause severe injury and/or death due to the following entrapment hazards:

Hair Entrapment: Hair can become entangled in suction outlet cover.

Limb Entrapment: A limb inserted into an opening of a suction outlet sump or suction outlet cover that is damaged, broken, cracked, missing, or not securely attached can result in a mechanical bind or swelling of the limb.

Body Suction Entrapment: A negative pressure applied to a large portion of the body or limbs can result in an entrapment.

Evisceration / Disembowelment Entrapment: A negative pressure applied directly to the intestines through an unprotected suction outlet sump or suction outlet cover which is damaged, broken, cracked, missing, or unsecured can result in evisceration / disembowelment entrapment.

Mechanical Entrapment: There is potential for jewelry, swimsuit, hair decorations, finger, toe, or knuckle to be caught in an opening of a suction outlet cover resulting in mechanical entrapment.

USE ONLY GENUINE WATERWAY REPLACEMENT PARTS.



Designed, Engineered & Manufactured in the USA.

waterway™

2200 East Sturgis Road, Oxnard CA 93030 • Phone 805.981.0262 • Fax 805.981.9403
www.waterwayplastics.com • waterway@waterwayplastics.com

©2025 Waterway Plastics

810-0230-2017.0325

- **This is an "Unblockable" SOFA.**
- **Suction cover life is 7 years, the sump wall fitting life is 15 years, the rest of the components have 25 year life, cover and all SOFA components shall be replaced on or before the end of service life.**
- **The use of adhesives or other attachment methods that prevent access to suction piping or SOFA components is prohibited.**
- **Please refer to Head Loss Curve, suction head measured at the wall fitting.**
- **This is an unblockable SOFA as marked on the suction cover.**
- **DO NOT USE POWER TOOLS TO INSTALL FASTENERS. Ensure proper thread engagement to prevent cross-threading.**
- **Ensure proper flatness of installation surface.**
- **When mud-rings, sump and other components are held in place by the interior surface of the pool, the surface should be free of deterioration or voids**
- **Damaged Fasteners shall be replaced with original parts, and must be passitive grade 316 stainless steel. The wall fitting shall be inspected for the presence of any CRACK or material loss. Cracked/damaged mud rings, sumps, or wall fittings shall be replaced.**
- **No unauthorized field modifications.**
- **This product is intended for use on gunite, vinyl, fiberglass, and roto-molded pools, spas and hot tubs.**
- **No modification shall be made to SOFA structure or flow path unless the configuration has been certified as a new SOFA.**
- **Service life begins the month and year in which SOFA components are installed with or without water.**
- **For winterization remove the cover and plug the inlet.**
- **Observe cover/grate/fasteners for damage each operational day.**
- **During installation ensure components and fastener receptacles are clean, free of debris and obstructions.**
- **Hand-check cover/grate for snugness to the sump/frame/wall fitting after installation.**
- **SOFA installation components with crack, chunks, or pieces broken off, stripped screw holes, brittleness, and/or unusual discoloration should be replaced.**
- **The mounting surface or interior surface of the pool should be free of deterioration.**
- **Start installation of screws by hand to ensure proper thread engagement and to prevent cross-threading.**
- **Do not exceed the safe flow rating of SOFAs as listed.**
- **All SOFAs should be installed in accordance with Waterway installation instructions.**
- **No modification shall be made to SOFA structure or flow path unless new configuration has been certified as a new SOFA.**
- **SOFA specific flow ratings are not to be exceeded while the pool is open.**
- **The capacity of secondary circulation system (skimmer, cutters, etc) should not be included when evaluating an individual suction system flow rating.**
- **For the flow rating for pools with multiple blockable SOFAs in one body of water without isolation valves: combine all SOFAs, minus the flow rate of one, if all are not equal use the larger flow rate.**
- **"Blockable" SOFAs in new pools shall be installed in multiple-SOFA system ONLY.**
- **"Blockable" SOFAs in existing pools with single SOFA systems shall be installed with an additional anti-entrapment device or system.**
- **This SOFA shall be used with Waterway sump or with Waterway mud-ring and field built sump per attached instructions.**
- **Unauthorized field modifications will void certification.**
- **Cover/grate, including fasteners, shall be observed for damage or tampering each operational day.**
- **The flow rating for pools with single or multiple unblockable SOFAs shall be the combined flow rate of all SOFAs piped together on one body of water.**
- **All SOFAs shall not be located on backrests or seats.**

Required Tools: Philips screw driver bit and torque wrench. Hand tighten screws. DO NOT use power tools. Torque fasteners to a maximum of 48 in-lb.

TO REDUCE THE RISK OF ENTRAPMENT HAZARDS:

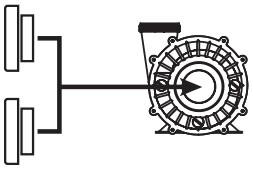

- Installation of a vacuum release system, which relieves entrapping suction, is recommended.
- SOFA(s) should be chosen so that the individual suction system flow rate is > pumping system's MAX system flow rate.
- Never use a pool or spa if any suction outlet component is damaged, broken, cracked, missing, or not securely attached.
- Replaced damaged, broken, cracked, missing, brittle, or not securely attached suction outlet components immediately.

All other applicable National, State, and local codes and requirements shall be followed.

WARNING

Failure to remove pressure test plugs and/or plugs used in winterization of the pool/spa from the suction outlets can result in an increased potential for suction entrapment as described on the previous page.

Failure to keep suction outlet components clear of debris, such as leaves, dirt, hair, paper and other material, can result in an increased potential for suction entrapment as described on the previous page.

Suction outlet components have a finite life. The cover/grate should be inspected frequently and replaced at least every seven years, or if found to be damaged, broken, cracked, missing, or not securely attached.

This fitting is rated at 244 GPM when mounted on the floor and 216 GPM when mounted on the wall when only one port on the center of the sump is used. This fitting is rated at 320 GPM when mounted on the floor and 240 GPM when mounted on the wall when two ports on the sump are used. If the fitting is missing or broken, replace with a fitting of equivalent rating or higher. Use of a lower rated suction fitting could result in entrapment of the body which could result in serious injury including drowning.

Do not use or operate pool, spa, or hot tub if this suction fitting is missing, broken or not secured per instructions. The suction fitting is intended to prevent entrapment of the body. Use of the spa hot tub with a missing, broken or improperly secured suction grate may result in serious personal injury including drowning.

When the pool, spa or hot tub is in operation, suction is created at this fitting. Users of the spa or hot tub must be instructed not to come in contact with this fitting in such a way as to block its orifice. If a user of the spa or hot tub blocks this fitting with his/her body, serious personal injury or drowning may occur.

In order to remove the suction cover (for service or winterization), using a Phillips-head screw driver remove the screws. Inspect both the suction cover and suction fitting for any cracks or damages.

It is imperative to securely attach the suction cover to the wall fittings (use only the original supplied screws or obtain original replacements). Do not over tighten the screws. Inspection of fasteners and observation for damaged/tampered with suction fittings is required.

Use 2.5" schedule 40 PVC pipe.

Any and all broken or missing parts must be replaced prior to starting spa or pool pump. Never operate spa or pool without drain cover in place and properly affixed, death or serious injury can result.

Do not exceed the safe flow rate. Do not increase flow through system by increasing pump size or horsepower.

Do not allow children to sit, play or interact with main drains or suction outlet.

SAVE THESE INSTRUCTIONS.

©2025 Waterway Plastics

640-134x V DIAMOND STRIP DRAIN COMPONENTS - VINYL

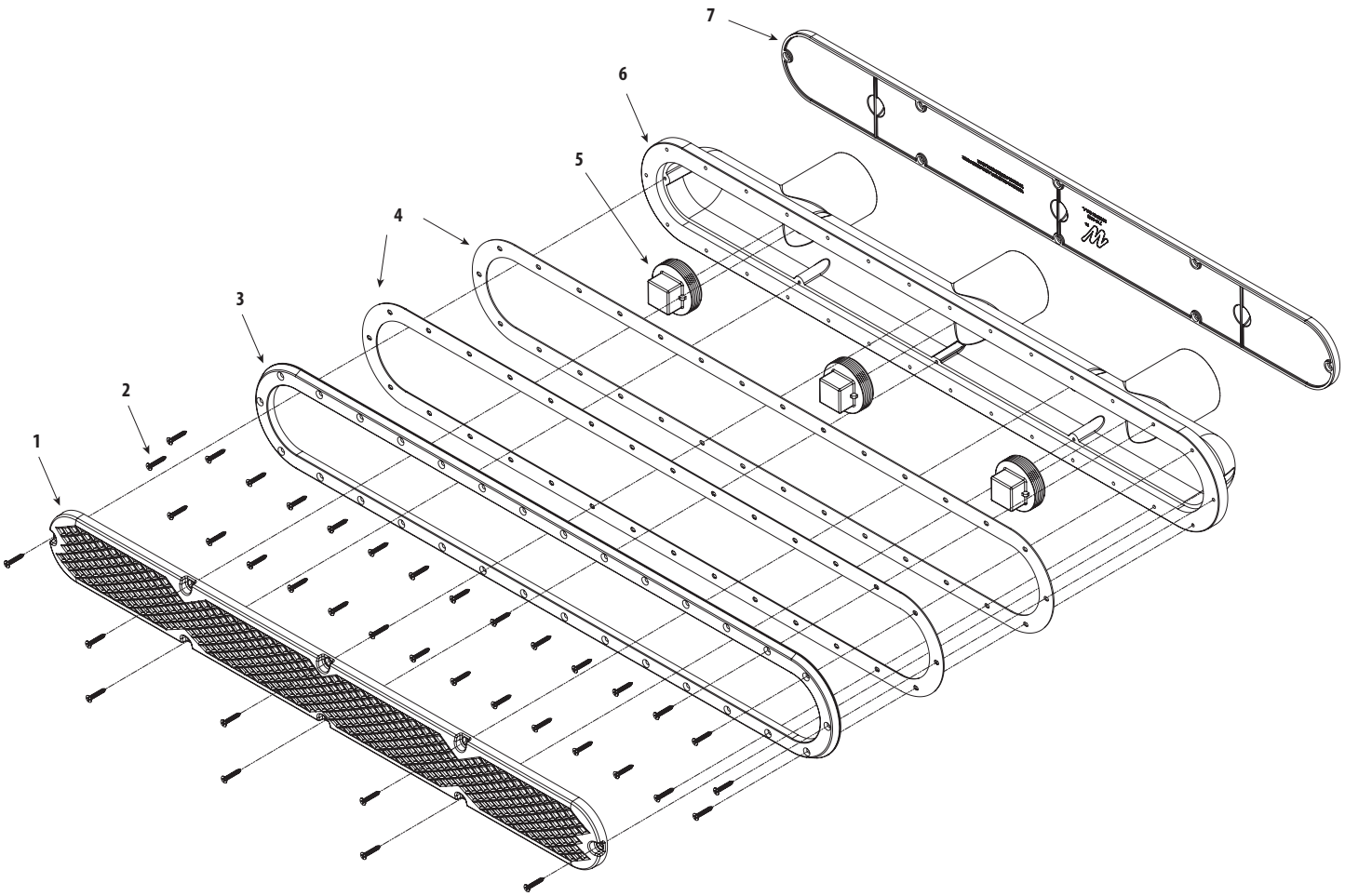

Item	*Part No.*	*Description*	*Quantity*
1	**642-134x V**	32" Diamond Pattern Grate	1
2	**819-1031**	#8 x 1" Screw	38
3	**642-1350**	Vinyl Liner Retainer Plate	1
4	**711-4470**	Vinyl Liner Mounting Plate Gasket	1
5	**715-9910**	2" Pipe Plug	3
6	**642-1300**	32" 3-Port Vinyl Liner Sump	1
7	**715-1360**	32" Plaster Cover/Plug	1

Install as illustrated.

WARNING: The Plaster Cover/Plug shall be removed prior to assembly of the Grate.

Hand tighten the screws using a Phillips screw driver. DO NOT use electrical or pneumatic tools for tightening the screws.

Properly level the sump and avoid the contamination of screw pilot hole.

©2025 Waterway Plastics

640-135x V DIAMOND STRIP DRAIN COMPONENTS - FIBERGLASS

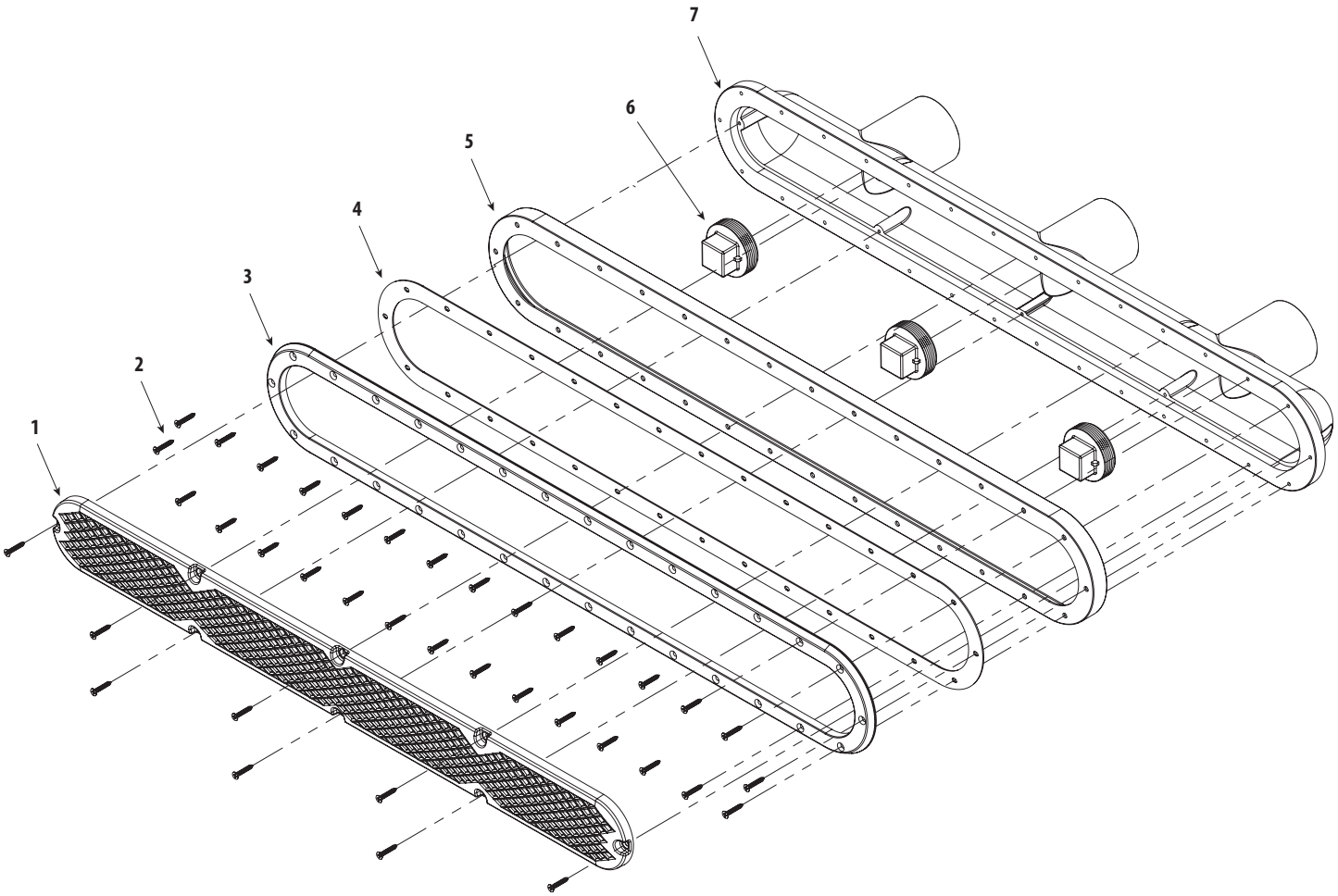

Item	*Part No.*	*Description*	*Quantity*
1	**642-134x V**	32" Diamond Pattern Grate	1
2	**819-1031**	#8 x 1" Screw	38
3	**642-1350**	Retainer Plate	1
4	**711-4470**	Mounting Plate Gasket	1
5	**711-4460**	Body U-Gasket	1
6	**715-9910**	2" Pipe Plug	3
7	**642-1300**	32" 3-Port Vinyl Liner Sump	1

Install as illustrated.

WARNING: The Plaster Cover/Plug shall be removed prior to assembly of the Grate.

Hand tighten the screws using a Phillips screw driver. DO NOT use electrical or pneumatic tools for tightening the screws.

Properly level the sump and avoid the contamination of the jump screw pilot holes.

©2025 Waterway Plastics

640-136x V DIAMOND STRIP DRAIN COMPONENTS - CONCRETE

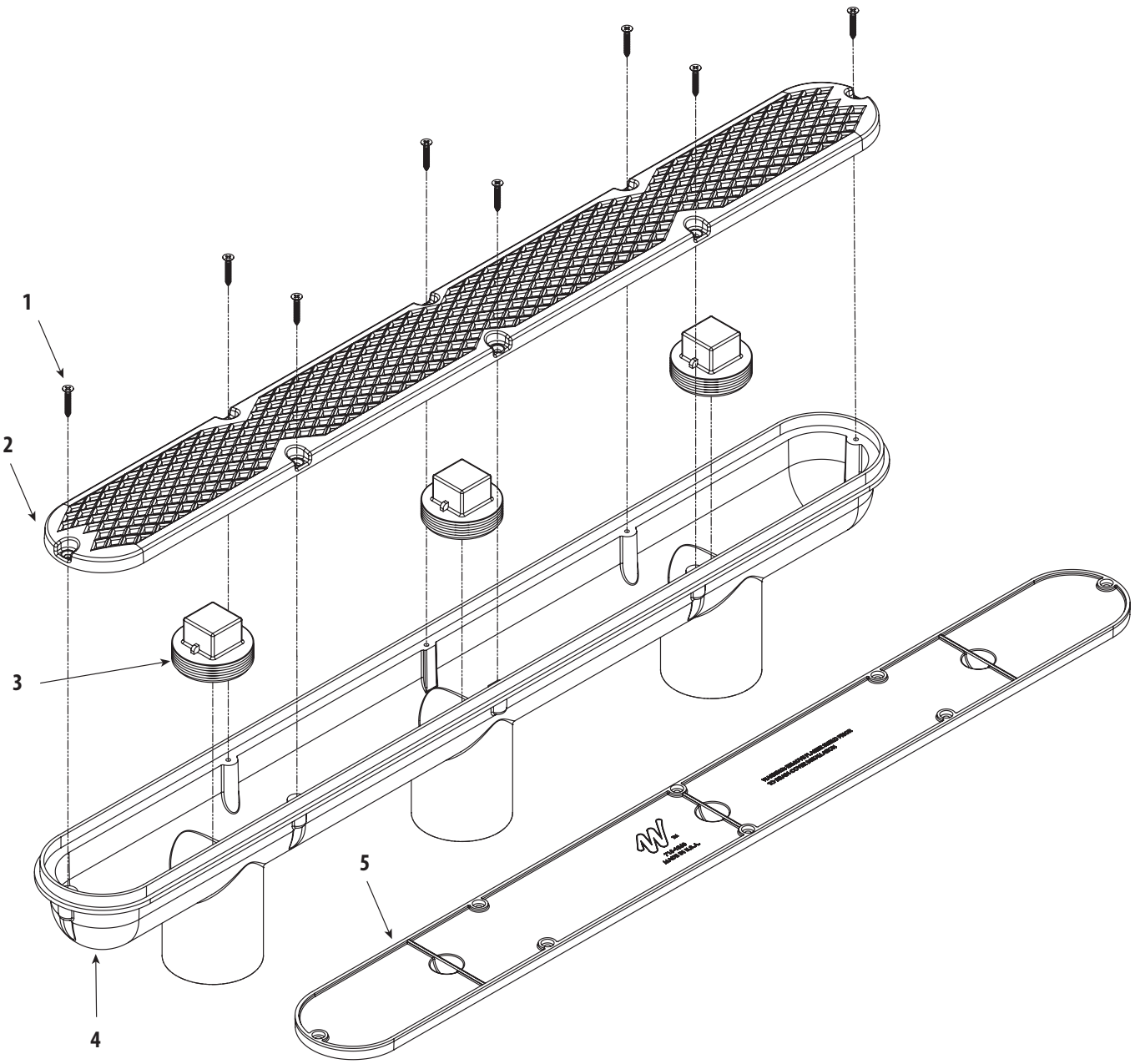

Item	*Part No.*	*Description*	*Quantity*
1	**819-1031**	#8 x 1" Screw	8
2	**642-134x V**	32" Diamond Pattern Grate	1
3	**715-9910**	2" Pipe Plug	3
4	**642-1320**	32" 3-Port Plaster Sump	1
5	**715-1360**	32" Plaster Cover/Plug	1

Install as illustrated.

WARNING: The Plaster Cover/Plug shall be removed prior to assembly of the Grate.

Hand tighten the screws using a Phillips screw driver. DO NOT use electrical or pneumatic tools for tightening the screws.

Properly level the sump and avoid the contamination of the fastener pilot holes.

©2025Waterway Plastics

640-137x V DIAMOND STRIP DRAIN COMPONENTS
FIELD BUILT SUMPS

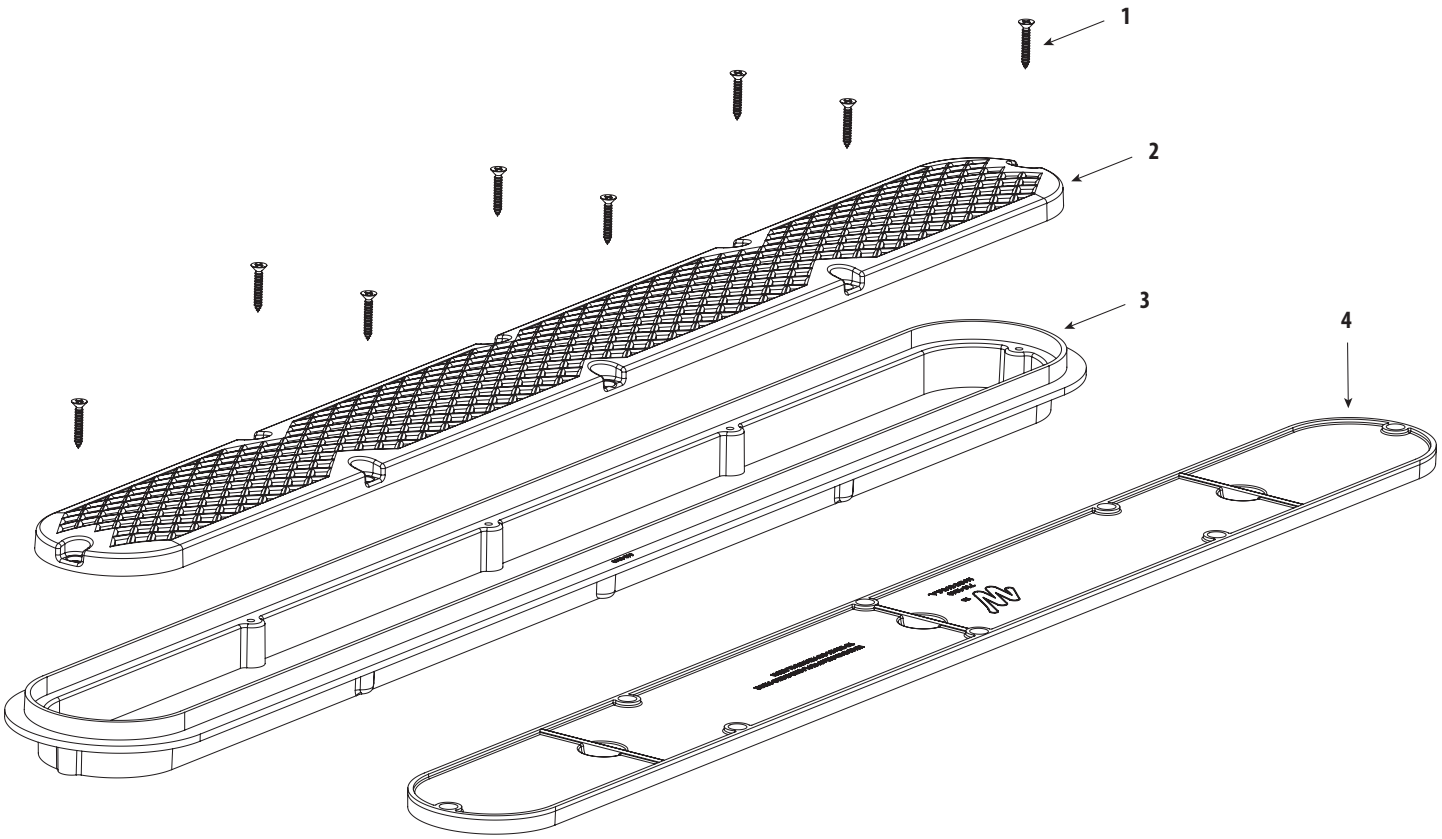

Item	*Part No.*	*Description*	*Quantity*
1	**819-1031**	#8 x 1" Screw	8
2	**642-134x V**	32" Diamond Pattern Grate	1
3	**642-1360**	32" Plaster Ring	1
4	**715-1360**	32" Plaster Cover/Plug	1

Install as illustrated.

WARNING: The Plaster Cover/Plug shall be removed prior to assembly of the Grate.

Hand tighten the screws using a Phillips screw driver. DO NOT use electrical or pneumatic tools for tightening the screws.

Properly level the mud-ring and avoid the contamination of the fastener pilot holes.

©2025 Waterway Plastics

DIAMOND STRIP DRAIN HEAD LOSS CURVE

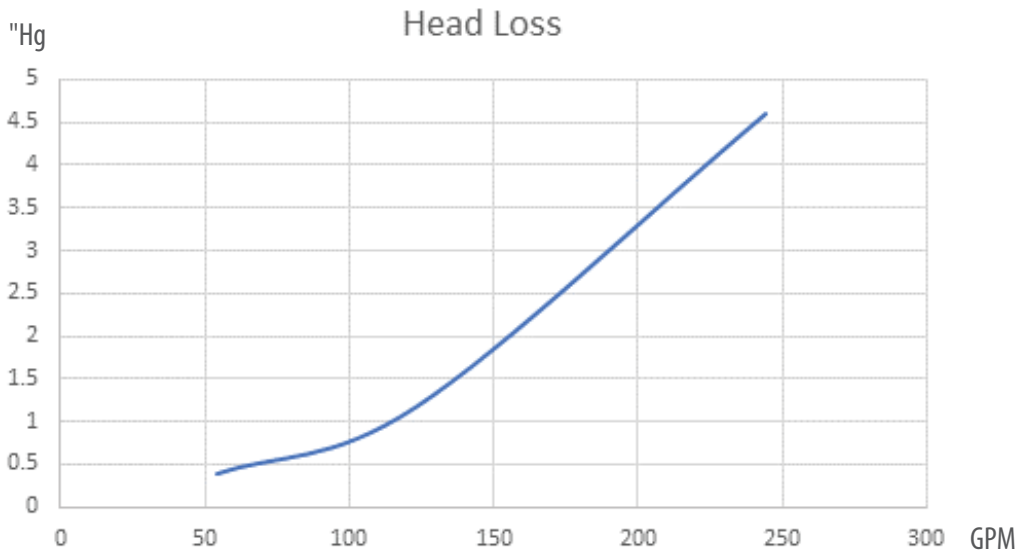

When Center Port is used.

Flow Rate (GPM)	54.1	123.0	244.0
NSF Measure Total Head Loss ("Hg)	0.39	1.17	4.59

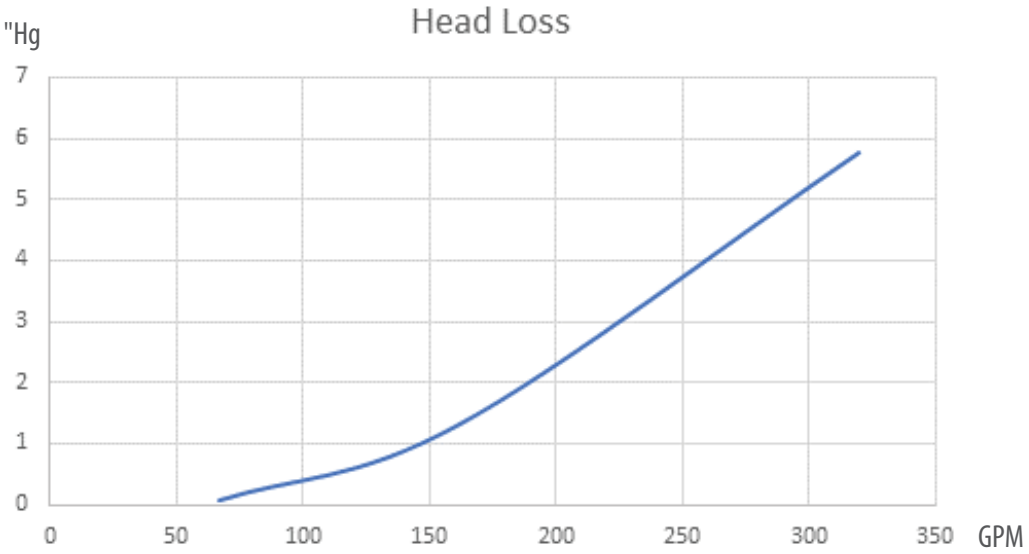

When 2 Outside Ports are used.

Flow Rate (GPM)	66.7	161.5	320.0
NSF Measure Total Head Loss ("Hg)	0.07	1.31	5.77

When one center port is used:

Pressure tap located 19.25in downstream of port in 2.5in DIA schedule 40 PVC pipe.

When two outside ports used:

Pressure tap located 29.5in downstream of port in 2.5in DIA schedule 40 PVC pipe.

WARRANTY

For product registration visit: www.waterwayplastics.com.
For Warranty questions or claims please contact point of purchase.

©2025 Waterway Plastics

FLOW PATH ZONE:

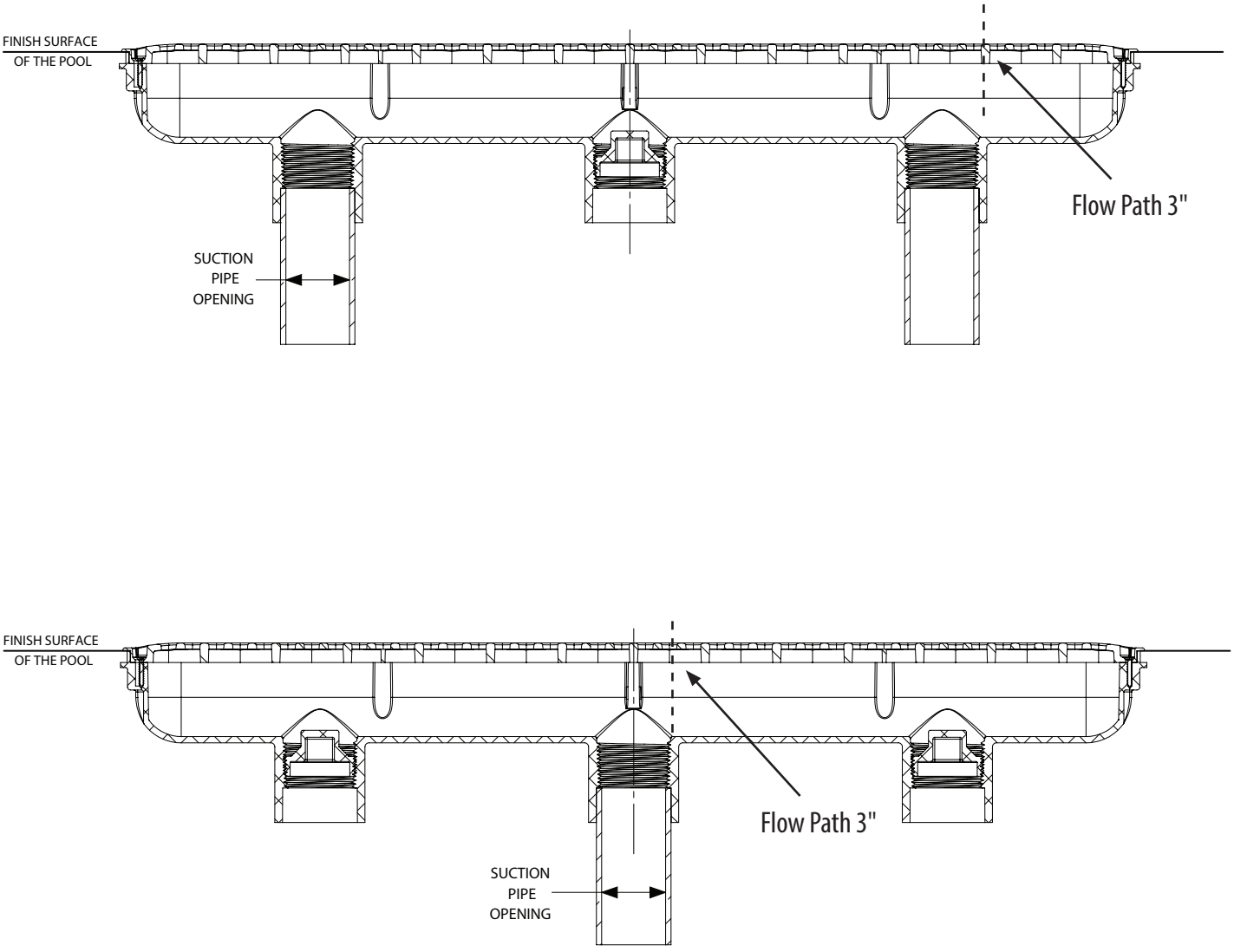

NOTE: No reductions in plumbing size are permitted within 16" from the point of connection to the sump.

FIELD FABRICATED SUMP:

Field fabricated sumps shall be made as shown below.

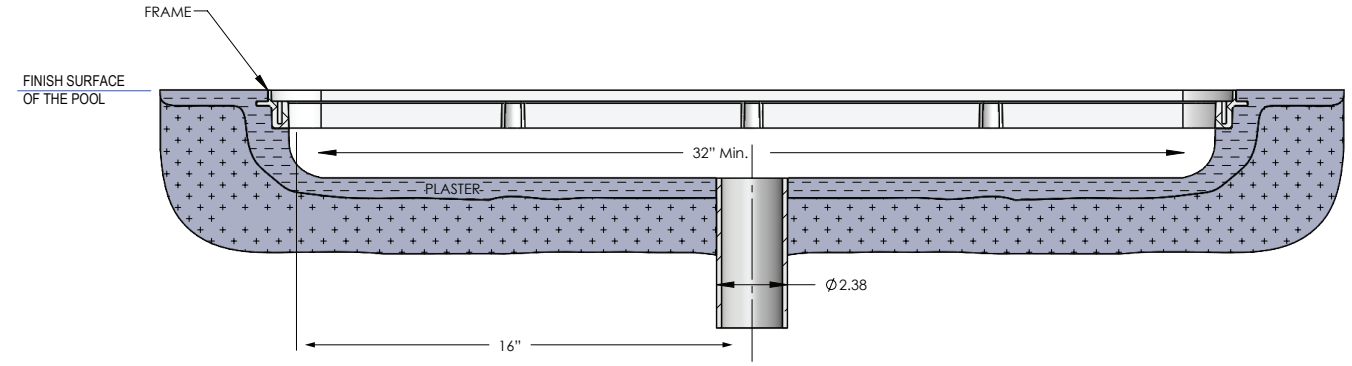

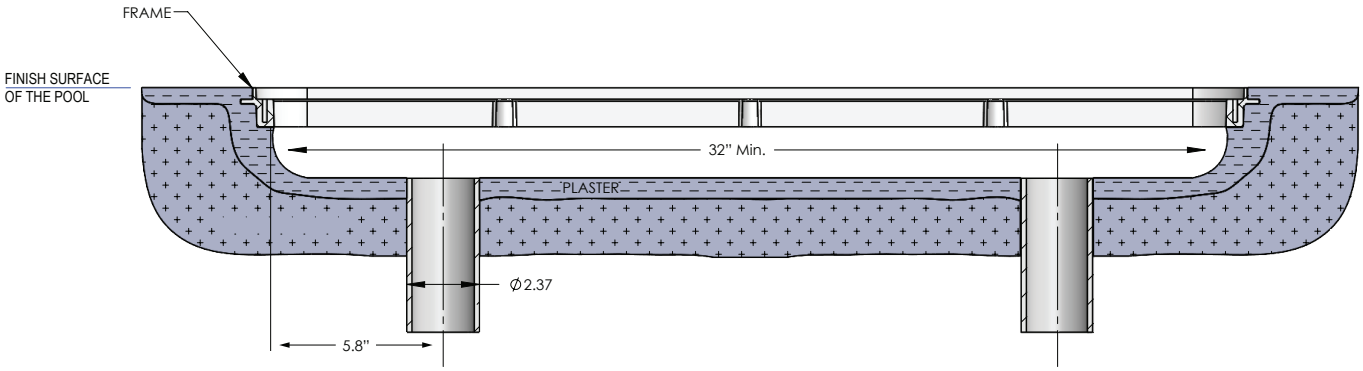

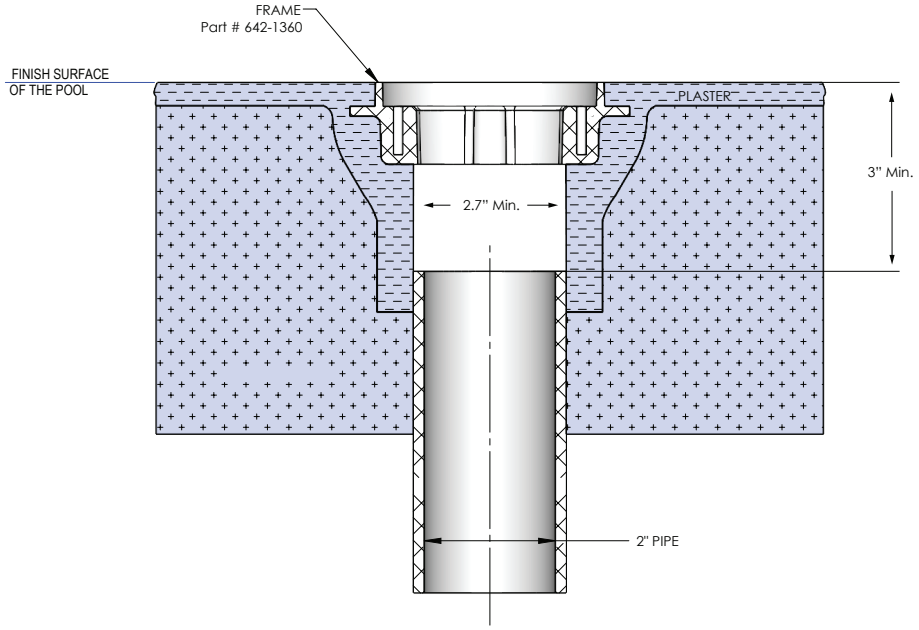

Install as illustrated.

NOTE: No reductions in plumbing size are permitted within 16" from the point of connection to the sump.

Properly level the mud-ring and avoid the contamination of fastener pilot holes.

STRIP DRAIN SUPPORTS
INSTALLATION

The six supplied optional supports can be used to further support the sump during the gunite application.

Please push supports down firmly into designated slots as shown in the picture below.

Remove and discard supports before installation of the drain cover.

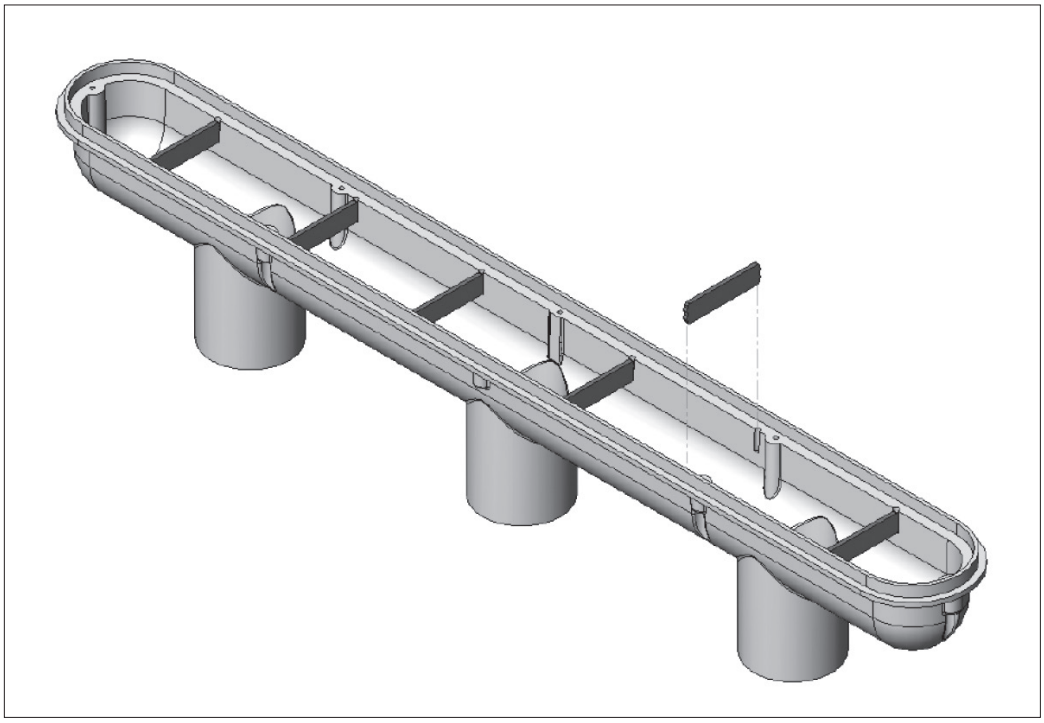

WARRANTY

For product registration visit: www.waterwayplastics.com.
For Warranty questions or claims please contact point of purchase.

Designed, Engineered & Manufactured in the USA.

2200 East Sturgis Road, Oxnard CA 93030
Phone 805.981.0262 • Fax 805.981.9403
www.waterwayplastics.com • waterway@waterwayplastics.com

©2025 Waterway Plastics

Installation Information Label
32" DIAMOND STRIP DRAINS

Cover/Grate Model#: 640-134x V • 640-135x V • 640-136x V • 640-137x V

Life & years from the date of installation: 7 Years

	Flow Ratings
Floor Flow Rate:	244 GPM (one port center)
Floor Flow Rate:	320 GPM (two ports)
Wall Flow Rate:	216 GPM (one port center)
Wall Flow Rate:	240 GPM (two ports)

Installer shall fill-in the location of the installed SOFA and the cover/grate Installation before giving this information label to the pool owner. This Installation Information Label shall be permanently posted as near feasible to the pump control, and that a copy of this information be given to the pool owner, to be kept with other important pool related documents.

Location of the Installed SOFA, such that it can be successfully identified in the future:

_____

The date the cover/grate was installed in the pool, where the month and year indicators on the label are easily activated in the field:

_____

32" Diamond Strip Drain: 640-134x V, 640-135x V, 640-136x V, 640-137x V

Floor Flow Rate: 244 GPM (one port center) Floor Flow Rate: 320 GPM (two ports)

Wall Flow Rate: 216 GPM (one port center) Wall Flow Rate: 240 GPM (two ports)

Removable Tags for Unblockable Cover/Grate Packaging
"READ, FOLLOW, AND UNDERSTAND ALL INSTRUCTIONS AND WARNINGS". "This VGBA Suction outlet has an installation specific flow rating and this product SHALL NOT be installed on a pumping system that is capable of exceeding this limit, which varies based on the number and location of installed suction outlets. READ and FOLLOW this section of the included installation instructions explaining how to calculate the suction system flow ratings and that of the installed pumping system.

⚠"WARNING! This is a UNBLOCKABLE VGBA Suction Outlet that must ONLY be installed in a multiple VGBA Suction Outlet System." (9.8.3.1)

This is a UNBLOCKABLE VGBA Suction Outlet. It must ONLY be installed in a suction system that also includes one or more of the following devices or systems designed to prevent suction entrapment, when and if the suction cover marked for single use and used as the sole source of water for a single suction outlet :

- Safety Vacuum Release System
- Suction Limiting Vent System
- Gravity Drainage System
- Automatic Pump Shut-Off System
- Drain Disablement
- Other Systems determined by Consumer Product Safety Commission to be equally effective as , or better than above-mentioned systems at preventing or eliminating the risk of injury or death associated with pool drainage system.

THIS TAG/LABEL IS TO BE CUT & REMOVED BY THE INSTALLER ONLY

©2025 Waterway Plastics

GENERAL CERTIFICATE OF COMPLIANCE

32" DIAMOND STRIP DRAIN - VINYL: P/N 640-134x V

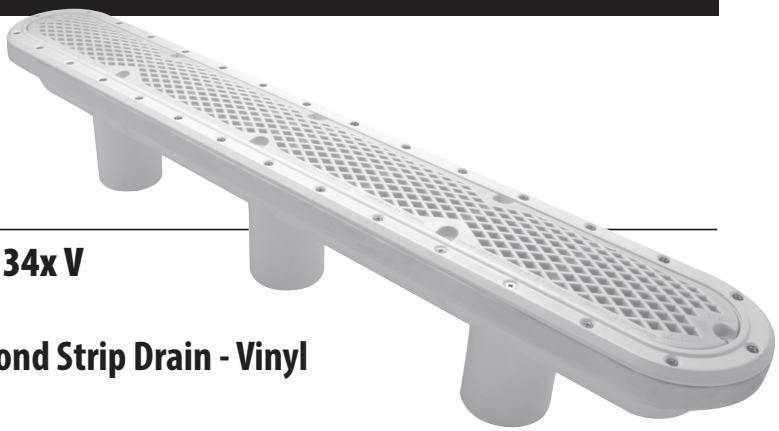

Contents: 1

Part Number: **640-134x V**

Description: **Diamond Strip Drain - Vinyl**

Size: **32"**

Open Area: **24 in²**

GPM @ 1.5 fps: **111**

Floor Flow Rate: **244 GPM (one port center)**

Floor Flow Rate: **320 GPM (two ports)**

Wall Flow Rate: **216 GPM (one port center)**

Wall Flow Rate: **240 GPM (two ports)**

NSF

VGBA 2017

For Date of Manufacture please see the manufacture mark on product



Date of Installation: _____

Name of Installer: _____

Signature of Installer: _____

This product has been tested, certified and listed to the requirements of ANSI/APSP - 16. 2017 per §1404 of the Virginia Graham Baker Pool and Spa Safety Act. Certified by: NSF International, Inc., 729 N. Dixboro Rd., Ann Arbor, MI 48105, 734-769-8670. Testing report from May, 2021.
This product is certified to comply with §1404 of the Virginia Graham Baker (VGBA 2017) Pool and Spa Safety Act. A copy of the test results for the above may be found at www.waterwayplastics.com or go to: www.nsf.org.

The test results supporting the product certification are maintained by Ray Mirzaei, 2200 Sturgis, Rd, Oxnard , CA 93030
Phone: 805-9810262 **Email**: raym@waterwayplastics.com

This product is manufactured by Waterway Plastics, Oxnard CA 93030

Designed, Engineered & Manufactured in the USA.

2200 East Sturgis Road Oxnard CA 93030 • Phone 805.981.0262 • Fax 805.981.9403
waterway@waterwayplastics.com • www.waterwayplastics.com

©2025 Waterway Plastics

GENERAL CERTIFICATE OF COMPLIANCE

32" DIAMOND STRIP DRAIN - FIELD BUILT SUMPS: P/N 640-137x V

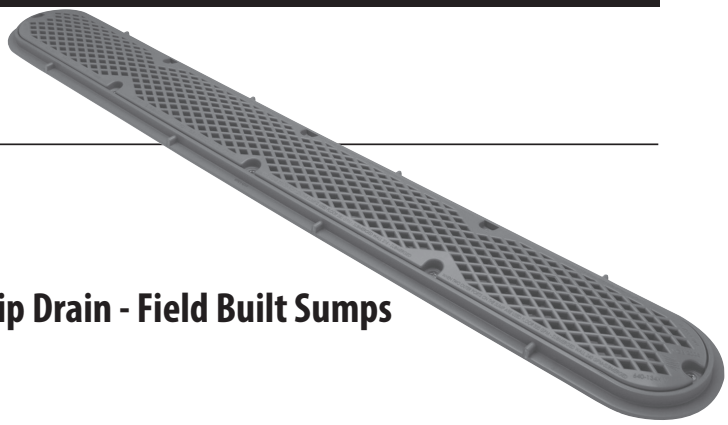

Contents: 1

Part Number: **640-137x V**

Description: **Diamond Strip Drain - Field Built Sumps**

Size: **32″**

Open Area: **24 in²**

GPM @ 1.5 fps: **111**

Floor Flow Rate: **244 GPM (one port center)**

Floor Flow Rate: **320 GPM (two ports)**

Wall Flow Rate: **216 GPM (one port center)**

Wall Flow Rate: **240 GPM (two ports)**

NSF

VGBA 2017

For Date of Manufacture please see the manufacture mark on product



Date of Installation: _____

Name of Installer: _____

Signature of Installer: _____

This product has been tested to ANSI/ASME 112.19.8-2007 (ANSI/APSP - 16. 2017) per §1404 of the Virginia Graham Baker Pool and Spa Safety Act. Certified by: NSF International, Inc., 729 N. Dixboro Rd., Ann Arbor, MI 48105, 734-769-8670 in February of 2021.

This product is certified to comply with §1404 of the Virginia Graham Baker (VGBA 2017) Pool and Spa Safety Act. A copy of the test results for the above may be found at www.waterwayplastics.com or go to www.nsf.org.

The test results supporting the product certification are maintained by Ray Mirzaei, 2200 Sturgis, Rd, Oxnard , CA 93030
Phone: 805-9810262 **Email:** raym@waterwayplastics.com

This product is manufactured by Waterway Plastics, Oxnard, CA 93030 USA

Designed, Engineered & Manufactured in the USA.

2200 East Sturgis Road Oxnard CA 93030 • Phone 805.981.0262 • Fax 805.981.9403
waterway@waterwayplastics.com • www.waterwayplastics.com

©2025 Waterway Plastics