85 TA 1”
High Efficiency
Twin Alternating
Water Softener

Owners Manual



1. **Read all instructions carefully before operation.**
2. **Avoid pinched o-rings during installation by applying (provided with install kit) NSF certified lubricant to all seals.**
3. **This system is not intended for treating water that is microbiologically unsafe or of unknown quality without adequate disinfection before or after the system.**

REVISION # 2
REVISION DATE 9/1/2015
80150377

Canadian Head Office
655 Park St.
Regina, SK S4N 5N1

Eastern Sales & Distribution
Pinebush Road, Unit 1
Cambridge, ON N1T 0A5

U.S. Head Office
8437 10th Avenue North
Golden Valley, MN 55427

Free Manual PDF downloaded from: https://watersoftenerplus.com/manuals/_pdf//manual.pdf
Back to product page: https://watersoftenerplus.com

Table of Contents

	PAGE
Unpacking / Inspection	**2**
Safety Guide	**2**
Proper Installation	**3**
Specification	**4**
Before Starting Installation	**4**
Installation Instructions	**6**
System Start Up	**7**
Programming Instructions	**9**
About The System	**10**
Maintenance	**12**
Sanitizing Procedure	**15**
Main Repair Parts	**16**
Trouble Shooting	**21**
Warranty	**22**

Unpacking / Inspection

Be sure to check the entire softener for any shipping damage or parts loss. Also note damage to the shipping cartons. Contact the transportation company for all damage and loss claims. The manufacturer is not responsible for damages in transit.

Small parts, needed to install the softener, are in a parts bag. To avoid loss of the small parts, keep them in the parts bag until you are ready to use them.

Safety Guide

For your safety, the information in this manual must be followed to minimize the risk of electric shock, property damage or personal injury.

- Check and comply with your provincial / state and local codes. You must follow these guidelines.
- Use care when handling the water softening system. Do not turn upside down, drop, drag or set on sharp protrusions.
- The water softening system works on 12 volt-60 Hz electrical power only. Be sure to use only the included transformer.
- Transformer must be plugged into an indoor 120 volt, grounded outlet only.
- Use clean water softening salts only, at least 99.5% pure. NUGGETor PELLET salts are recommended. Do not use rock, block, granulated or ice cream making salts. They contain dirt and sediments, or mush and cake, and will create maintenance problems.
- Keep the salt lid in place on the softener unless servicing the unit or refilling with salt.
- **WARNING**: This system is not intended for treating water that is microbiologically unsafe or of unknown quality without adequate disinfection before or after the system.

Free Manual PDF downloaded from: https://watersoftenerplus.com/manuals/_pdf//manual.pdf
Back to product page: https://watersoftenerplus.com

Proper Installation

This water softening system must be properly installed and located in accordance with the Installation Instructions before it is used.

- ***Do not*** install or store where it will be exposed to temperatures below freezing or exposed to any type of weather. Water freezing in the system will break it. Do not attempt to treat water over 100°F.
- ***Do not*** install in direct sunlight. Excessive sun or heat may cause distortion or other damage to non-metallic parts.
- Properly ground to conform with all governing codes and ordinances.
- Use only *lead-free solder and flux* for all sweat-solder connections, as required by state and federal codes.
- Maximum allowable inlet water pressure is 125 psi. If daytime pressure is over 80 psi, night time pressure may exceed the maximum. Use a pressure reducing valve to reduce the pressure.
- Softener resins may degrade in the presence of chlorine or chloramines above 2 ppm. If you have chlorine or chloramines in excess of this amount, you may experience reduced life of the resin. In these conditions, you may wish to consider purchasing a whole house carbon filter softener system with a chlorine reducing media.
- ***WARNING:*** Discard all unused parts and packaging material after installation. Small parts remaining after the installation could be a choke hazard.

Free Manual PDF downloaded from: https://watersoftenerplus.com/manuals/_pdf//manual.pdf
Back to product page: https://watersoftenerplus.com

Specifications

Specifications	85TA-75	85TA-100	85TA-150	85TA-200	85TA-300	85TA-400
Optional Settings - High Efficiency						
Salt Used - Per Regeneration	2.3 lbs	3.0 lbs	4.5 lbs	6.0 lbs	9.0 lbs	12.0 lbs
Water Used - Regeneration	22.6 gal	31.6 gal	44.3 gal	60.9 gal	102.2 gal	135.9 gal
Hardness Removal - Grains	11,250	15,000	22,500	30,000	45,000	60,000
Factory Settings - Standard Capacity						
Salt Used - Per Regeneration	4.5 lbs	6.0 lbs	9.0 lbs	12.0 lbs	18.0 lbs	24.0 lbs
Water Used - Regeneration	34.0 gal	43.4 gal	62.7 gal	87.1 gal	139.2 gal	185.1 gal
Hardness Removal - Grains	18,750	25,000	37,500	50,000	75,000	100,000
Optional - High Capacity						
Salt Used - Per Regeneration	7.5 lbs	10.0 lbs	15.0 lbs	20.0 lbs	30.0 lbs	40.0 lbs
Water Used - Regeneration	49.6 gal	64.3 gal	90.3 gal	124.6 gal	196.2 gal	260.7 gal
Hardness Removal - Grains	22,500	30,000	45,000	60,000	90,000	120,000
Resin Quantity - Cubic Feet	0.75 ft^3	1.0 ft^3	1.5 ft^3	2.0 ft^3	3.0 ft^3	4.0 ft^3
Tank Size	8x44	9x48	10x54	12x52	14x65	16x65
Tank Jacket / Media Loaded	No	No	No	No	No	No
Brine Tank / Cabinet Size (Inches)	18.1 x 34.5	18.1 x 34.5	18.1 x 34.5	20.3 x 37.4	23.0 x 40.5	23.0 x 40.5
Salt Storage Capacity	240 lbs	240 lbs	240 lbs	350 lbs	420 lbs	420 lbs
Flow Rate @ 15 psi Pressure Drop	11.0 gpm	14.0 gpm	15.0 gpm	18.0 gpm	17.0 gpm	18.0 gpm
Flow Rate @ 25 psi Pressure Drop	14.0 gpm	19.0 gpm	21.0 gpm	25.0 gpm	23.0 gpm	24.0 gpm
Back Wash Flow Rate	1.5 gpm	2.0 gpm	2.4 gpm	3.5 gpm	5.0 gpm	7.0 gpm
Shipping Weight	155 lbs	185 lbs	248 lbs	292 lbs	420 lbs	420 lbs
Plumbing Connections	1" (Optional 3/4")					
Resin Type	Canature 8% High Capacity Ion Exchange Resin					
Electrical Requirements	Input 120V 60 Hz - Output 12V 650mA					
Water Temperature	Min 39 - Max. 100 degrees Fahrenheit					
Water Pressure	Min. 20 - Max. 125 psi					

- Continuous operation at flow rates greater than the service flow rate may affect capacity and efficiency performance.
- The manufacturer reserves the right to make product improvements which may deviate from the specifications and descriptions stated herein, without obligation to change previously manufactured products or to note the change.
- The above capacity and flow rate specifications have not been validated by WQA.

Before Starting Installation

Tools, Pipe, and Fittings, Other Materials

- Pliers
- Screwdriver
- Teflon tape
- Razor knife
- Two adjustable wrenches
- Additional tools may be required if modification to home plumbing is required.
- Plastic inlet and outlet fittings are included with the softener. To maintain full valve flow, 3/4" or 1" pipes to and from the softener fittings are recommended. You should maintain the same, or larger, pipe size as the water supply pipe, up to the softener inlet and outlet.
- Use copper, brass, or PEX pipe and fittings.
- Some codes may also allow PVC plastic pipe.
- ALWAYS install the included bypass valve, or 3 shut-off valves. Bypass valves let you turn off water to the softener for repairs if needed, but still have water in the house pipes.
- 5/8" OD drain line is needed for the valve drain. A 10' length of hose is included. with some models.
- A length of 5/8" OD drain line tubing is needed for the brine tank over flow fitting (optional).
- Nugget or pellet water softener salt is needed to fill the cabinet or brine tank.

Free Manual PDF downloaded from: https://watersoftenerplus.com/manuals/_pdf//manual.pdf
Back to product page: https://watersoftenerplus.com

Where To Install The Softener

- Place the softener as close as possible to the pressure tank (well system) or water meter (city water).
- Place the softener as close as possible to a floor drain, or other acceptable drain point (laundry tub, sump, standpipe, etc.).
- Connect the softener to the main water supply pipe BEFORE the water heater. **DO NOT RUN HOT WATER THROUGH THE SOFTENER**. Temperature of water passing through the softener must be less than 100 deg. F.
- Keep outside faucets on hard water to save soft water and salt.
- Do not install the softener in a place where it could freeze. **Damage caused by freezing is not covered by the warranty.**
- Put the softener in a place water damage is least likely to occur if a leak develops. The manufacturer will not repair or pay for water damage.
- A 120 volt electric outlet, to plug the included transformer into, is needed within 6 feet of the softener. The transformer has an attached 6 foot power cable. **Be sure the electric outlet and transformer are in an inside location, to protect from wet weather.**
- If installing in an outside location, you must take the steps necessary to assure the softener, installation plumbing, wiring, etc., are as well protected from the elements, contamination, vandalism, etc., as when installed indoors.
- **Keep the softener out of direct sunlight**. The sun's heat may soften and distort plastic parts.

Configurations

The connections for the unit can be turned up or down. Pay special attention to the figures below for the placement of the MASTER and SLAVE valves as well as the configuration of the BYPASS / METER locations.

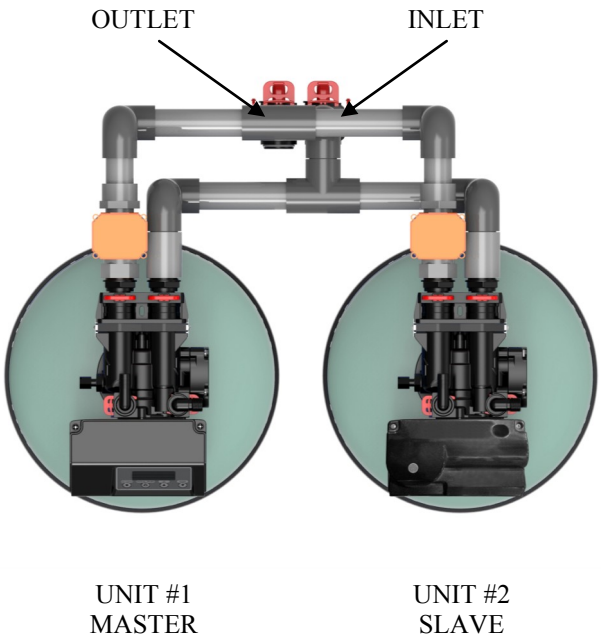

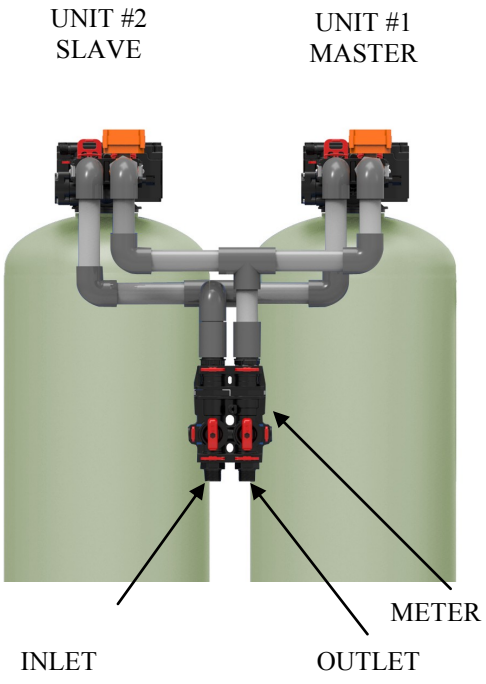

Free Manual PDF downloaded from: https://watersoftenerplus.com/manuals/_pdf//manual.pdf
Back to product page: https://watersoftenerplus.com

Installation Instructions

1. If your hot water tank is electric, turn off the power to it to avoid damage to the element in the tank.
2. If you have a private well, turn the power off to the pump and then shut off the main water shut off valve. If you have municipal water, simply shut off the main valve. Go to the faucet, (preferably on the lowest floor of the house) turn on the cold water until all pressure is relieved and the flow of water stops.
3. Locate the softener tanks and brine tank close to a drain where the system will be installed. The surface should be clean and level.
4. Connect the inlet and outlet of the softener using appropriate fittings. Perform all plumbing according to local plumbing codes.
    - Use a ½" minimum pipe or tubing size for the drain line
    - **ON COPPER PLUMBING SYSTEMS BE SURE TO INSTALL A GROUNDING WIRE BETWEEN THE INLET AND OUTLET PIPING TO MAINTAIN GROUNDING.**

Any solder joints being soldered near the valve must be done before connecting any piping to the valve. Always leave at least 6" (152 mm) between the valve being soldered and joints when soldering pipes that are connected to the valve. Failure to do this could cause damage to the valve.

5. Connect the drain hose to each valve and secure it with a hose clamp. Run the drain hoses to the nearest floor drain. This can be ran up overhead or down along the floor. If running the drain line more than 20 ft overhead, it is recommended to increase the hose size to 3/4". NEVER MAKE A DIRECT CONNECTION INTO A WASTE DRAIN. A PHYSICAL AIR GAP OF AT LEAST 1.5" SHOULD BE USED TO AVOID BACTERIA AND WASTEWATER TRAVELLING BACK THROUGH THE DRAIN LINE INTO THE SOFTENER.
6. Connect the brine tubing from each valve to a 3/8" tee (included) and then connect to the brine tank.
7. Using the Allen Key (included), place the unit in the bypass position. Slowly turn on the main water supply. At the nearest cold treated water tap nearby remove the faucet screen, open the faucet and let water run a few minutes or until the system is free of any air or foreign material resulting from the plumbing work.
7. Make sure there are no leaks in the plumbing system before proceeding. Close the water tap when water runs clean.
8. Open the brine tank / cabinet salt lid and add water until there is approximately 3" (75 mm) of water in the tank. Do not add salt to the brine tank at this time.
9. Proceed to start up instructions.

Note: The unit is not ready for service until you complete the start-up instructions.

Free Manual PDF downloaded from: https://watersoftenerplus.com/manuals/_pdf//manual.pdf
Back to product page: https://watersoftenerplus.com

System Start-Up

Key Pad Configuration

SETTINGS	This function is to enter the basic set up information required at the time of installation.
MANUAL REGEN	This function is to initiate an immediate or delayed manual regeneration.
DOWN / UP	Increase or decrease the value of the settings while in the programming mode.

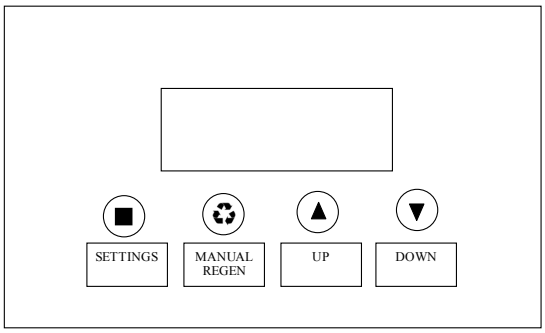

Manual Regeneration (Step / Cycle Valve)

IMMEDIATE REGENERATION

To start an immediate regeneration (or step valve through each position), press and hold the MANUAL REGEN. Button for 3 seconds (until beeps). Use the UP or DOWN key to select U1 or U2. Press the MANUAL REGEN key to start.

IMMEDIATE REGENERATION

Press and hold MANUAL REGEN key（5 SECONDS）

MANUAL REGEN
U1 IMMEDIATELY
U2 IMMEDIATELY

Free Manual PDF downloaded from: https://watersoftenerplus.com/manuals/_pdf//manual.pdf
Back to product page: https://watersoftenerplus.com

Start-up Instructions

1. Plug the power transformer into an approved power source. Connect the power cord to the valve.
2. When power is supplied to the control, the screen will display "INITIALIZING WAIT PLEASE" while it finds the service position.
3. Start an immediate regeneration by pressing holding the MANUAL REGEN key. Use the UP or DOWN key to select U1. Press the MANUL REGEN key to start. When the valve stops at the BRINE position, press any key again to advance to the BACKWASH position.
4. Once in the BACKWASH cycle, open the inlet on the bypass valve slowly and allow water to enter the unit. Allow all air to escape from the unit before turning the water on fully then allow water to run to drain for 3-4 minutes or until all media fines are washed out of the softener indicated by clear water in the drain hose.
5. Press any button to advance to the RINSE position. Check the drain line flow. Allow the water to run for 3-4 minutes or until the water is clear.
6. Press any button to advance to the REFILL position. Press again to advance to the SERVICE position.
7. Once in the SERVICE position Start an immediate regeneration again by pressing holding the MANUAL REGEN key. Use the UP or DOWN key to select U2. Press the MANUL REGEN key to start. When the valve stops at the BRINE position, press any key again to advance to the BACKWASH position.
8. Once in the BACKWASH cycle, open the inlet on the bypass valve slowly and allow water to enter the unit. Allow all air to escape from the unit before turning the water on fully then allow water to run to drain for 3-4 minutes or until all media fines are washed out of the softener indicated by clear water in the drain hose.
9. Press any button to advance to the RINSE position. Check the drain line flow. Allow the water to run for 3-4 minutes or until the water is clear.
10. Press any button to advance to the REFILL position. Check that the valve is filling water into the brine tank. Allow the valve to refill for the full amount of time as displayed on the screen to insure a proper brine solution for the next regeneration.
11. The valve will automatically advance to the SERVICE position. Open the outlet valve on the bypass, then open the nearest treated water faucet and allow the water to run until clear, close the tap and replace the faucet screen.
12. Add salt into the cabinet / brine tank.
13. Program unit.

Free Manual PDF downloaded from: https://watersoftenerplus.com/manuals/_pdf//manual.pdf
Back to product page: https://watersoftenerplus.com

Programming Instructions

The factory setting for WATER TYPE is WELL / OTHER. Do not adjust this setting until after start-up is complete. If the setting is changed to MUNICIPAL before start-up, the back wash cycle will be skipped.

Settings
Press SETTINGS key (3 SECONDS / BEEP)

TIME OF DAY
12:01 PM

YEAR
2012

MONTH
AUGUST

DAY
21

SET HARDNESS
20 GRAINS

SALT SETTING
HIGH EFFICIENCY
STD CAPACITY
IRON & MN

WATER SOURCE
MUNICIPAL
WELL / OTHER

TRIP POINT
OFF

PROGRAMMING COMPLETE

CHANGE SETTINGS

To change settings press the SETTINGS key for 3 seconds. The first screen to be displayed will be the TIME OF DAY. To adjust the HOUR values, use the UP or DOWN key. To advance to the MINUTE values, press the SETTINGS key again. After adjusting each value using the UP or DOWN keys, continue advancing to the next value or screen by pressing the SETTINGS key.

TIME OF DAY, YEAR, MONTH, DAY,

Time of day is for normal operation of system and the scheduling of the regeneration time. The date is used in a diagnostic function to track the last time the system regenerated.

SET HARDNESS

This value is the maximum compensated water hardness in grains per gallon of the raw water supply. It is used to calculate the system capacity. If Ferrous Iron is present add 4 gpg for every 1 ppm of Ferrous Iron.

SALT SETTING

Choose HIGH EFFICIENCY to minimize salt usage. Your system will regenerate a little more often but your salt usage can be reduced by 20% compared to the STANDARD setting.

Choose STANDARD when you need to maximize your capacity but still operate the system with good efficiency.

Choose IRON & MN if you have problem water containing these minerals. The high salt setting will be needed since these minerals are more difficult to clean out of the resin bed. Note: A resin cleaner will also need to periodically added to the brine tank to insure proper operation.

WATER SOURCE

This setting will determine if the BACKWASH OVERIDE function will be on or off. Select MUNICIPAL if the water source is clean (<1NTU turbidity) and the system will skip the back wash cycle based on the setting in BACKWASH OVERIDE.

Select WELL / OTHER if any Iron or Manganese is present or if the water source is not clean (< 1NUT turbidity). The system will back wash every time.

TRIP POINT

When the flow rate exceeds 5gpm for more than 30 seconds, the controller will bring both tanks into service to provide maximum service flow rate. When the flow rate is less than 3 gpm for 1 minute the second tank will come off-line.

When the two valves are in service at the same time, the total treated water will be divided by two and subtracted from the capacity of each tank.

Free Manual PDF downloaded from: https://watersoftenerplus.com/manuals/_pdf//manual.pdf
Back to product page: https://watersoftenerplus.com

About The System

Control Operation During A Power Failure

In the event of a power failure, the valve will keep track of the time and day for 48 hours. The programmed settings are stored in a non-volatile memory and will not be lost during a power failure. If power fails while the unit is in regeneration, the valve will finish regeneration from the point it is at once power is restored. If the valve misses a scheduled regeneration due to a power failure, it will queue a regeneration at the next regeneration time once power is restored.

Safety Float

The brine tank is equipped with a safety float which prevents your brine tank from overfilling as a result of a malfunction such as a power failure.

Main Display

The main display will pause on the Date and Time page for 5 seconds. Then it will continually scroll through all of the system diagnostic display pages. To manually scroll through the diagnostics, press the down or up key. To reset the TOTAL REGENS, TOTAL GALLONS OVER RUN TOTAL, or PEAK flow rates, press and hold the MANUAL REGEN key the value changes to zero.

PARAMETER	DESCRIPTION
JULY/17/2012 8:30 PM	Month, Day, Year, Time
U1 ONLINE TOTAL 1500 GAL	The current status of Unit #1 (ONLINE or STANDBY). The total capacity of Unit #1.
U1 ONLINE REMAIN 1500 GAL	The current status of Unit #1 (ONLINE or STANDBY). The remaining capacity of Unit #1.
U2 STANDBY TOTAL 1500 GAL	The current status of Unit #2 (ONLINE or STANDBY). The total capacity of Unit #1.
U2 STANDBY REMAIN 1500 GAL	The current status of Unit #2 (ONLINE or STANDBY). The remaining capacity of Unit #1.
LAST REGEN U1 9/24/12	The date of Unit #1 last regeneration.
LAST REGEN U2 9/24/12	The date of Unit #2 last regeneration.
TOTAL REGENS U1 999	The total number of Unit #1 regenerations.
TOTAL REGENS U2 999	The total number of Unit #2 regenerations.
TOTAL GALLONS U1 001590 GAL	The total amount of gallons treated by Unit #1.
TOTAL GALLONS U2 001590 GAL	The total amount of gallons treated by Unit #2.
CURRENT 1.5 GPM PEAK 6.5 GPM	The current flow rate and the peak flow rate since the last regeneration.
REFILL TIME 12:00	The refill time.
VALVE MODE SOFTENER UF	Regeneration mode of operation.

Free Manual PDF downloaded from: https://watersoftenerplus.com/manuals/_pdf//manual.pdf
Back to product page: https://watersoftenerplus.com

New Sounds

You may notice new sounds as your water softener operates. The regeneration cycle lasts up to 180 minutes. During this time, you may hear water running intermittently to the drain.

Regeneration Process

When the capacity of Unit #1 is exhausted, a regeneration is necessary to restore full capacity. Unit #2 will come on line while Unit #1 regenerates. When Unit #1 is completed its regeneration, it will remain in standby until Unit #2 is exhausted.

Step	Name	Description
#1	Brine	The brine solution is introduced slowly to the bottom of the tank flowing up through the ion exchange resin pushing the hardness out to drain and restoring system capacity.
#2	Back Wash	Fresh water is introduced to the bottom of the tank flowing upwards expanding the ion exchange resin to rinse out any dirt or small particles to the drain and to un-compact the bed to restore full service flow rates.
#3	Rinse	Fresh water is introduced from the top of the tank down flowing down through the ion exchange resin rinsing any excess brine solution out to the drain.
#4	Refill	A fixed amount of soft water is added to the salt tank to prepare and insure fully saturated brine for the next regeneration.

System Configuration

85TA UPFLOW System Configuration			
Tank Size (Diameter)	Injector Set	Brine Line Flow Control (BLFC)	Drain Line Flow Control (DLFC)
8"	#0000 Black	0.20 GPM	#1 (1.5 GPM)
9"			#2 (2.0 GPM)
10"			#3 (2.4 GPM)
12"	#00 Purple		#5 (3.5 GPM)
13"	#0 Red		#6 (4.0 GPM)
14"	#1 WHITE		#A (5.0 GPM)
16”	#1 WHITE		#B (7.0 GPM)

Free Manual PDF downloaded from: https://watersoftenerplus.com/manuals/_pdf//manual.pdf
Back to product page: https://watersoftenerplus.com

Manual Bypass

In the case of emergency, such as an overflowing brine tank, you can isolate your water softener from the water supply using the bypass valve located at the back of the control. In normal operation the bypass is open with the on/off knobs in line with the inlet and outlet pipes.

To isolate the softener, simply rotate the knobs clockwise (as indicated by the word BYPASS and arrow) until they lock. You can use your water related fixtures and appliances as the water supply is bypassing the softener. However, the water you use will be hard. To resume soft water service, open bypass valve by rotating the knobs counterclockwise.

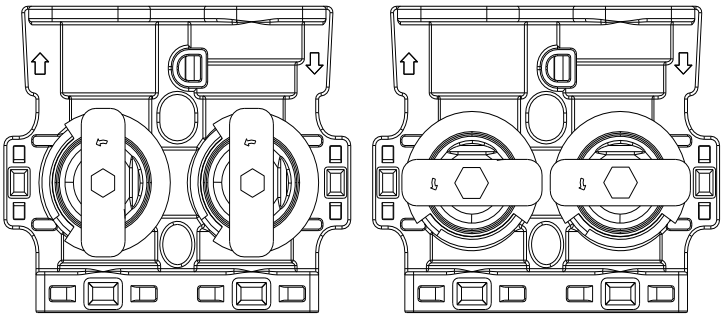

SERVICE POSITION BYPASS POSITION

Maintenance

Adding Salt

Use only crystal water softener salt. Check the salt level monthly. It is important to maintain the salt level above the water level. To add salt, simply lift the salt lid and add the salt directly into the brine tank. Be sure the brine well cover is on and fill only to the height of the brine well.

Bridging

Humidity or wrong type of salt may create a cavity between the water and the salt. This action, known as "bridging", prevents the brine solution from being made, leading to your water supply being hard.

If you suspect salt bridging, carefully pound on the outside of the brine tank or pour some warm water over the salt to break up the bridge. This should always be followed up by allowing the unit to use up any remaining salt and then thoroughly cleaning out the brine tank. Allow two hours to produce a brine solution, then manually regenerate the softener.

Free Manual PDF downloaded from: https://watersoftenerplus.com/manuals/_pdf//manual.pdf
Back to product page: https://watersoftenerplus.com

Cleaning or Replacing Injectors

Sediment, salt and silt will restrict or clog the injector. A clean water supply and pure salt will prevent this from happening.

The injector assembly is located on the right side of the control valve. This assembly is easy to clean.

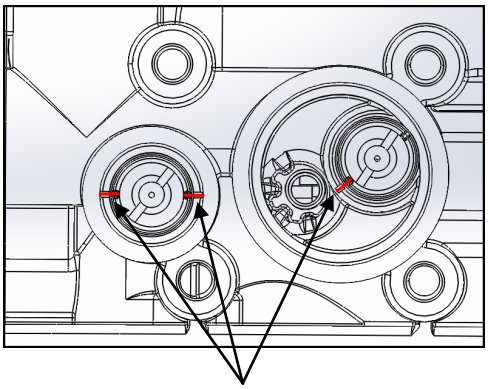

TIP: There are marks on the injector holder that must be lined up to the marks on the valve to fully insert the holder into the hole in the valve body

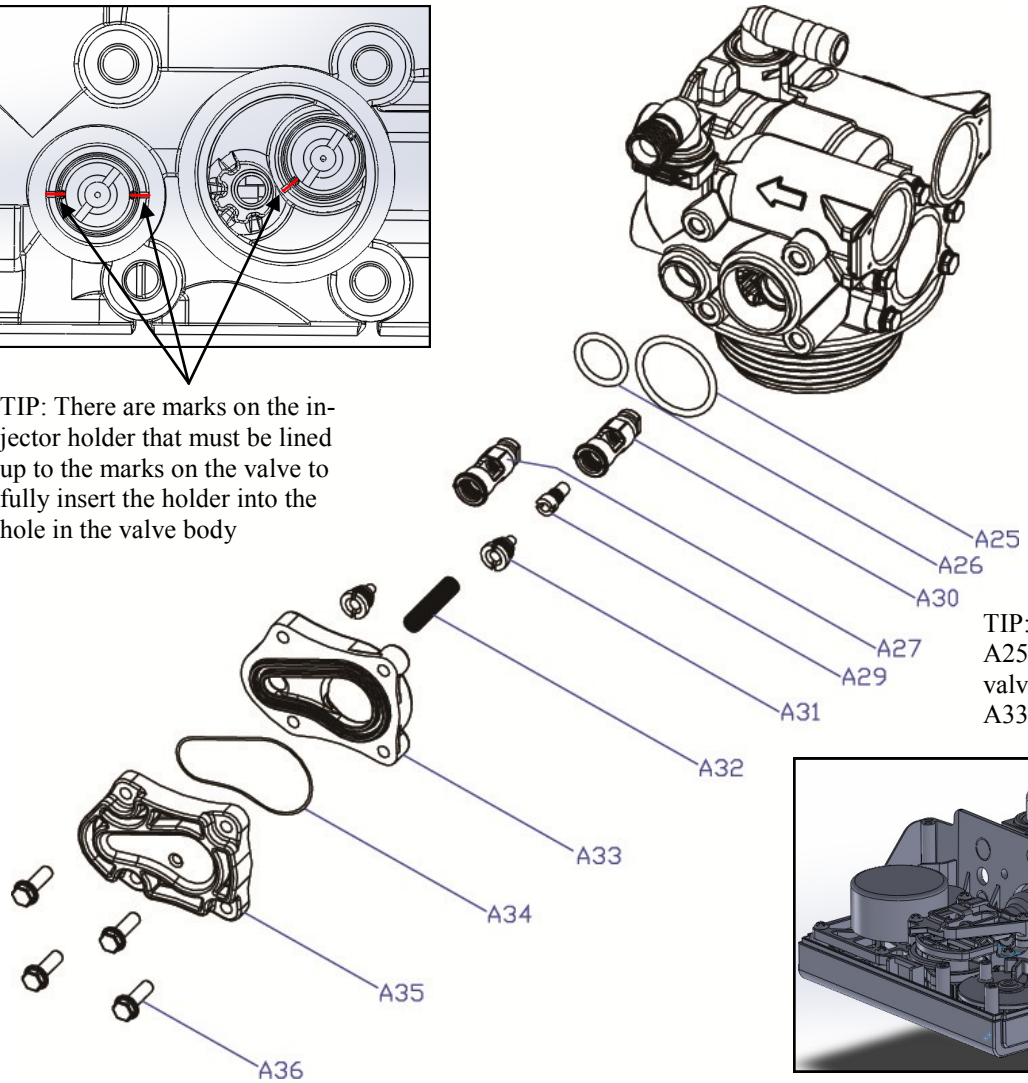

TIP: Place the o-rings A25 and A26 onto the valve before installing A33.

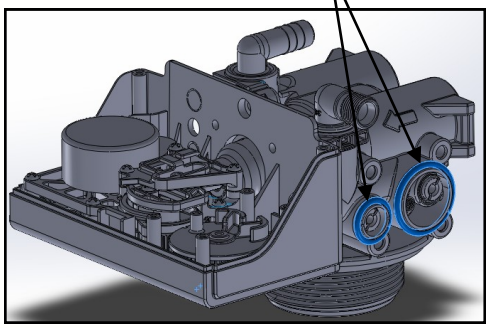

1. Shut off the water supply to your softener and reduce the pressure by opening a cold soft water faucet.
2. Using a screwdriver, remove the four screws holding the injector cover to the control valve body.
3. Carefully remove the assembly and disassemble as shown in above figure.
4. The injector orifice is removed from the valve body by carefully turning it out with a large screwdriver. Remove the injector throat the same way.
5. Carefully flush all parts including the screen. Use a mild acid such as vinegar or Pro-Rust Out to clean the small holes in the orifice and throat.
6. Reassemble using the reverse procedure.

Free Manual PDF downloaded from: https://www.watersoftenerplus.com/manuals/_pdf//manual.pdf
Back to product page: https://watersoftenerplus.com

Replacing Brine Line Flow Control (BLFC)

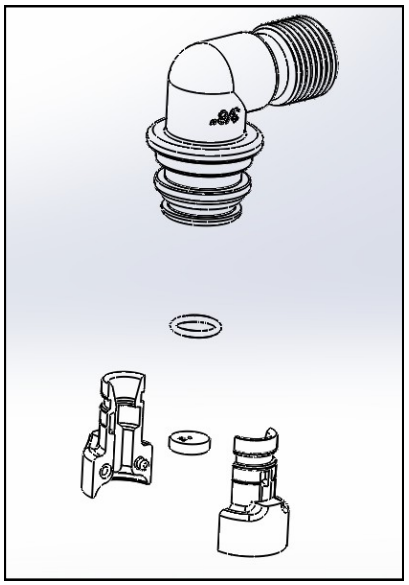

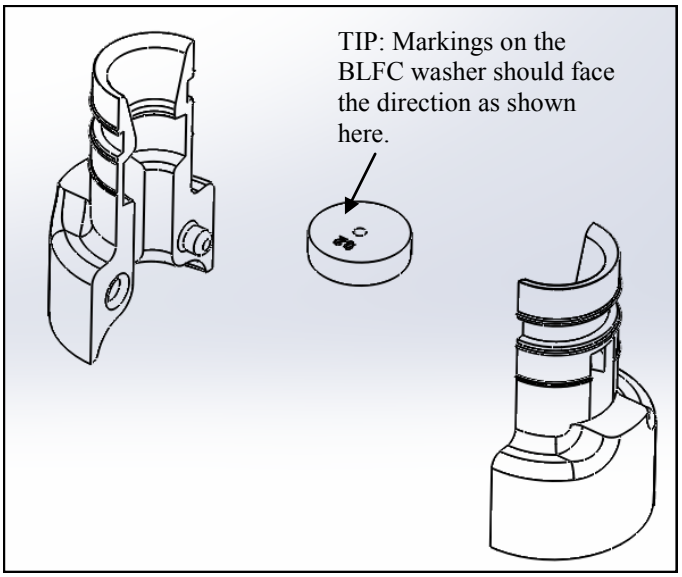

1. Remove the red clip that secures the brine elbow.
2. Remove the BLFC holder from the elbow fitting.
3. Split the BLFC holder apart and remove the flow washer.
4. Reassemble using the reverse procedure.

Replacing Drain Line Flow Control (DLFC)

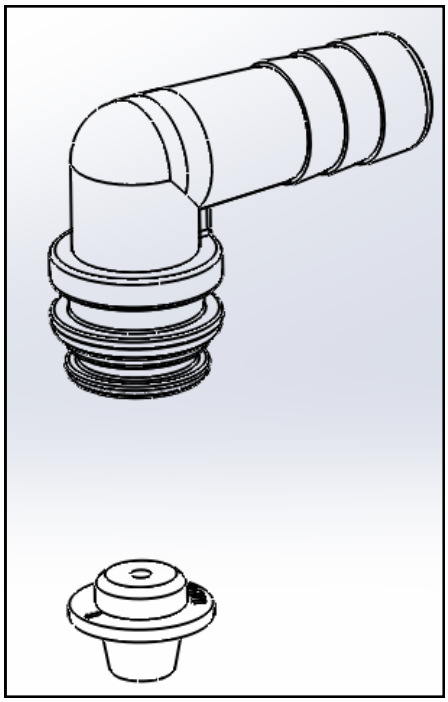

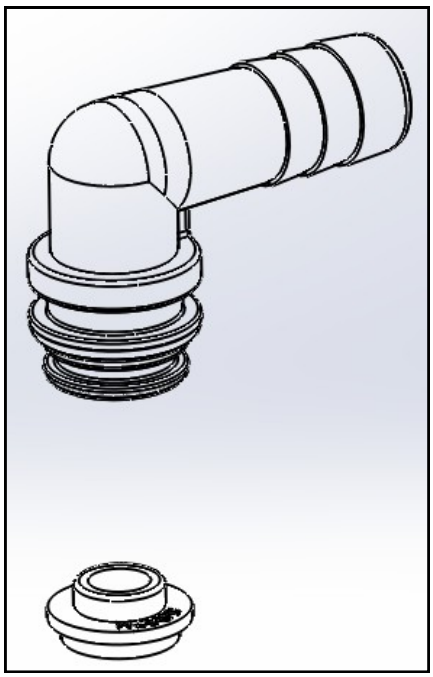

1. Remove the red clip that secures the drain line elbow.
2. Remove the BLFC washer from the elbow fitting.
3. Reassemble using the reverse procedure.

Free Manual PDF downloaded from: https://watersoftenerplus.com/manuals/_pdf//manual.pdf
Back to product page: https://watersoftenerplus.com

Care of Your System

To retain the attractive appearance of your new water softener, clean occasionally with mild soap solution. Do not use abrasive cleaners, ammonia or solvents. Never subject your softener to freezing or to temperatures above 100°F.

Resin Cleaner

An approved resin cleaner must be used on a regular basis if your water supply contains iron. The amount of resin cleaner and frequency of use is determined by the quantity of iron in your water (consult your local representative or follow the directions on the resin cleaner package).



Item #	Description
80030006	Res Care – 1 gal. Bottle
80030005	Res Care – 1 qt. Bottle



Item #	Description
80030002	Rust Out – 1.5 lb. Bottle
80030003	Rust Out – 5 lb. Bottle
80030004	Rust Out – 50 lb. Pail



Item #	Description
55030001	Res Up Feeder – 0.5 oz/day Feeder
55030002	Res Up Feeder – 1.0 oz/day Feeder

Sanitizing Procedure

Care is taken at the factory to keep your water softener clean and sanitary. Materials used to make the softener will not infect or contaminate your water supply, and will not cause bacteria to form or grow. However, during shipping, storage, installing and operating, bacteria could get into the softener. For this reason, sanitizing as follows is suggested when installing.

Sani-System Liquid Sanitizer Concentrate



Item# 80030021—Softener Sanitizer 0.25 fl.oz (24 Pack)

1. Be sure to complete all installation steps, including programming.
2. For effective and complete sanitization, Sani-System Liquid Sanitizer Concentrate is recommended. Pour one 0.25 fl. Oz. package into the brine well located in the cabinet or brine tank. (Alternative use 3/4 oz of common 5.25% household bleach)
3. Start an immediate regeneration. (See page 11)
4. The Softener Sanitizer Solution is drawn into and through the water softener to sanitize it. This sanitizing regeneration is over in about two hours. Then, **soft water** is available for your use.

NOTE: Sanitizing is recommended by the Water Quality Association for disinfecting. On some water supplies, they suggest periodic sanitizing.

Free Manual PDF downloaded from: https://watersoftenerplus.com/manuals/_pdf//manual.pdf
Back to product page: https://watersoftenerplus.com

Main Repair Parts - Connectors



A A A

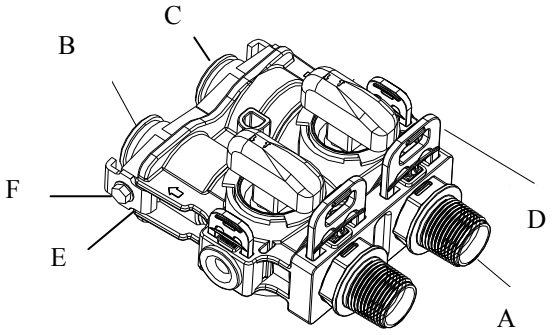

REPLACEMENT PARTS - CONNECTORS			
Replacement Part Number	Part Description	DWG #	Quantity
60010020	3/4" NPT ELBOW	A	2
60010019	1" NPT STRAIGHT	A	2
60010023	3/4" NPT STRAIGHT	A	2
60010079	VALVE COUPLING INLET	B	1
60010101	VALVE COUPLING OUTLET (METER SIDE)	C	1
60010025	PLASTIC SECURE CLIP	D	2
60010046	BYPASS SS CLIP	E	2
60010047	BYPASS SS SCREW	F	2

Free Manual PDF downloaded from: https://watersoftenerplus.com/manuals/_pdf//manual.pdf
Back to product page: https://watersoftenerplus.com

Control Valve Exploded View

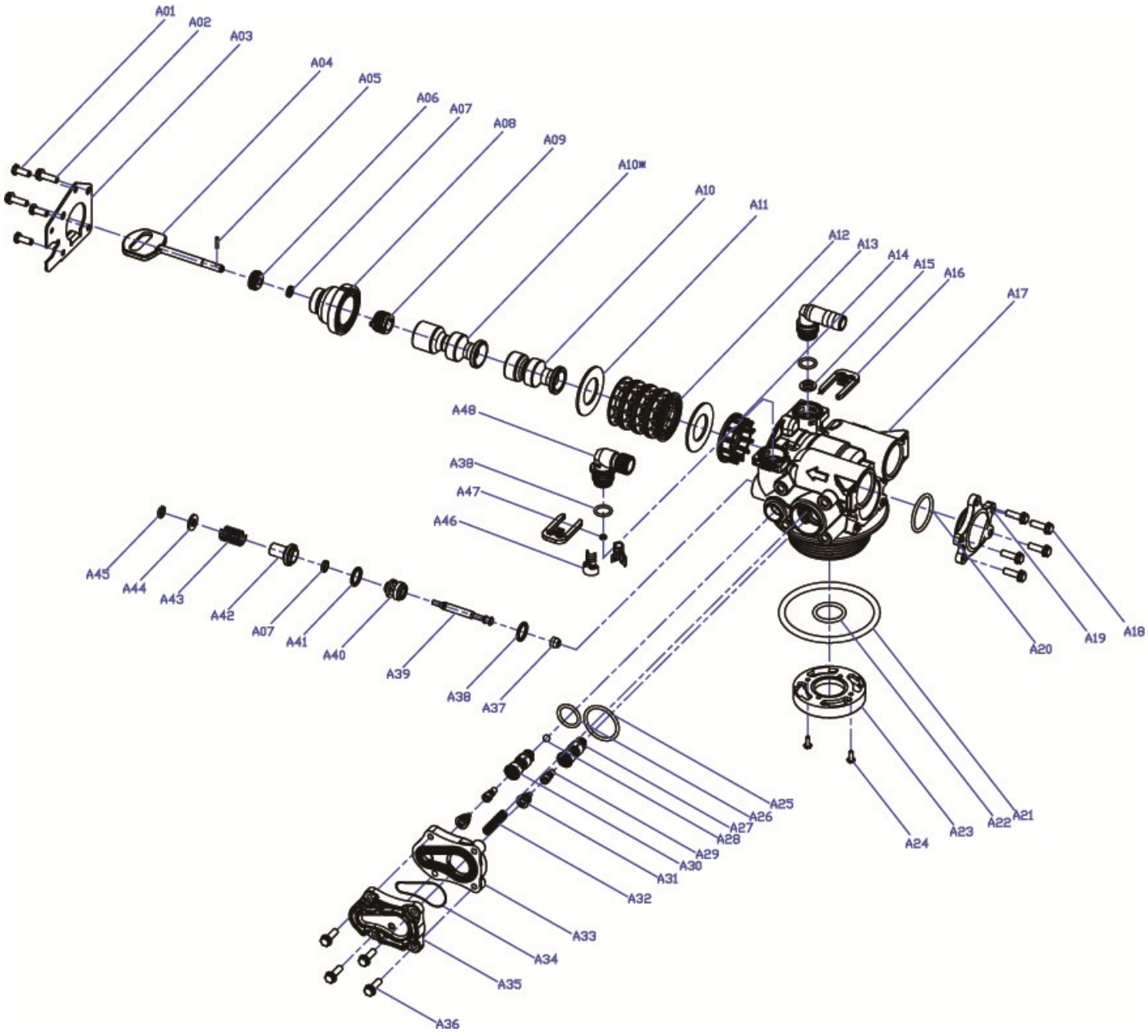

VALVE REPAIR PARTS LIST			
Replacement Part Number	Part Description	Replacement Part Number	Part Description
60010127	INJECTOR SET #0000 BLACK	60010129	85HE UPFLOW PISTON ASSEMBLY
60010126	INJECTTOR SET #000 GREY	60010171	85HE DOWNFLOW PISTON ASSEMBLY
60010035	INJECTOR SET #00 VIOLET	60010130	85HE SEAL & SPACER KIT
60010034	INJECTOR SET #0 RED	60010131	85HE DLFC #1 1.5 GPM
60010033	INJECTOR SET #1 WHITE	60010132	85HE DLFC #2 2.0 GPM
60010032	INJECTOR SET #2 BLUE	60010133	85HE DLFC #3 2.4 GPM
60010031	INJECTOR SET #3 YELLOW	60010135	85HE DLFC #5 3.5 GPM
60010128	BLFC 0.2 GPM	60010136	85HE DLFC #A 5.0 GPM
60010110	BLFC 0.3 GPM	60010137	85HE DLFC #B 7.0 GPM
60010082	BLFC 0.7 GPM	60010138	85HE DLFC #C 10.0 GPM

Free Manual PDF downloaded from: https://watersoftenerplus.com/manuals/_pdf//manual.pdf
Back to product page: https://watersoftenerplus.com

Control Valve Parts List

85HE CONTROL VALVE (UPFLOW)				
Replacement Part Number	MFG Part Number	Part Description	DWG #	Quantity
	5056087	Screw-M5x12(Hexagon)	A01	3
	5056088	Screw-M5x16(Hexagon With Washer)	A02	2
	5056047	End Plug Retainer	A03	1
	5031016	BNT85HE Piston Rod	A04	1
	5056097	Piston Pin	A05	1
	5031015	BNT85HE Quad Ring Plug Cover	A06	1
	5056070	Quad Ring	A07	2
	5031011	BNT85HE End Plug	A08	1
	5031014	BNT85HE Piston Retainer	A09	1
	5057002	BNT85HE Piston(Electrical Upflow)	A10*	1
	5056073	Seal	A11	5
	5056021	Spacer	A12	4
60010074	5010082	Drain Fitting-B	A13	1
	5031005	BNT85HE Spacer	A14	1
	5056186	DLFC-2#	A15	1
60010069	5056172	Secure Clip-s	A16	2
	5031002	BNT85HE Valve Body	A17	1
	5056508	Screw-M5x12(Hexagon With Washer)	A18	5
	5030004	BNT85 End Cover	A19	1
	5030013	O-Ring-¢30×2.65	A20	1
	5056063	O-Ring-¢78.74×5.33	A21	1
	26010103	O-Ring-¢25×3.55	A22	1
	7060007	Valve Bottom Connector	A23	1
	13000426	Screw-ST2.9X13(Large Washer)	A24	2
	5031022	O-Ring-¢32×3	A25	1
	5031021	O-Ring-¢18×3	A26	1
60010174	5031013	Injector Plug Body	A27	1
	30040089	Injector Throat	A29	2
60010175	5031012	BNT85HE Injector Fixed Sleeve	A30	1
	30040090	Injector Nozzle	A31	2
	5056103	Injector Screen	A32	1
	5031003	BNT85HE Injector Cover Body	A33	1
	5031018	O-Ring-¢40×2.65	A34	1
	5031004	BNT85HE Injector Cover Cap	A35	1
	5031027	Screw-M5x25(Hexagon With Washer)	A36	4
	5056075	Seal Mat	A37	1
	5056134	O-Ring-¢12×2	A38	3
	5056054	Injector Stem	A39	1
	5056031	Injector Spacer	A40	1
	5056081	O-Ring-¢12.5×1.8	A41	1
	5056030	Injector Cap	A42	1
	5056093	Injector Screen	A43	1
	5010049	Special Washer	A44	1
	5056105	Retaining Ring	A45	1
60010173	5031010	BNT85HE BLFC Fixed Sleeve	A46	2
	5056076	BLFC-2#	A47	1
60010172	5005629	Injector Fitting(3/8".Elbow)	A48	1

Free Manual PDF downloaded from: https://watersoftenerplus.com/manuals/_pdf//manual.pdf
Back to product page: https://watersoftenerplus.com

Power Head Exploded View

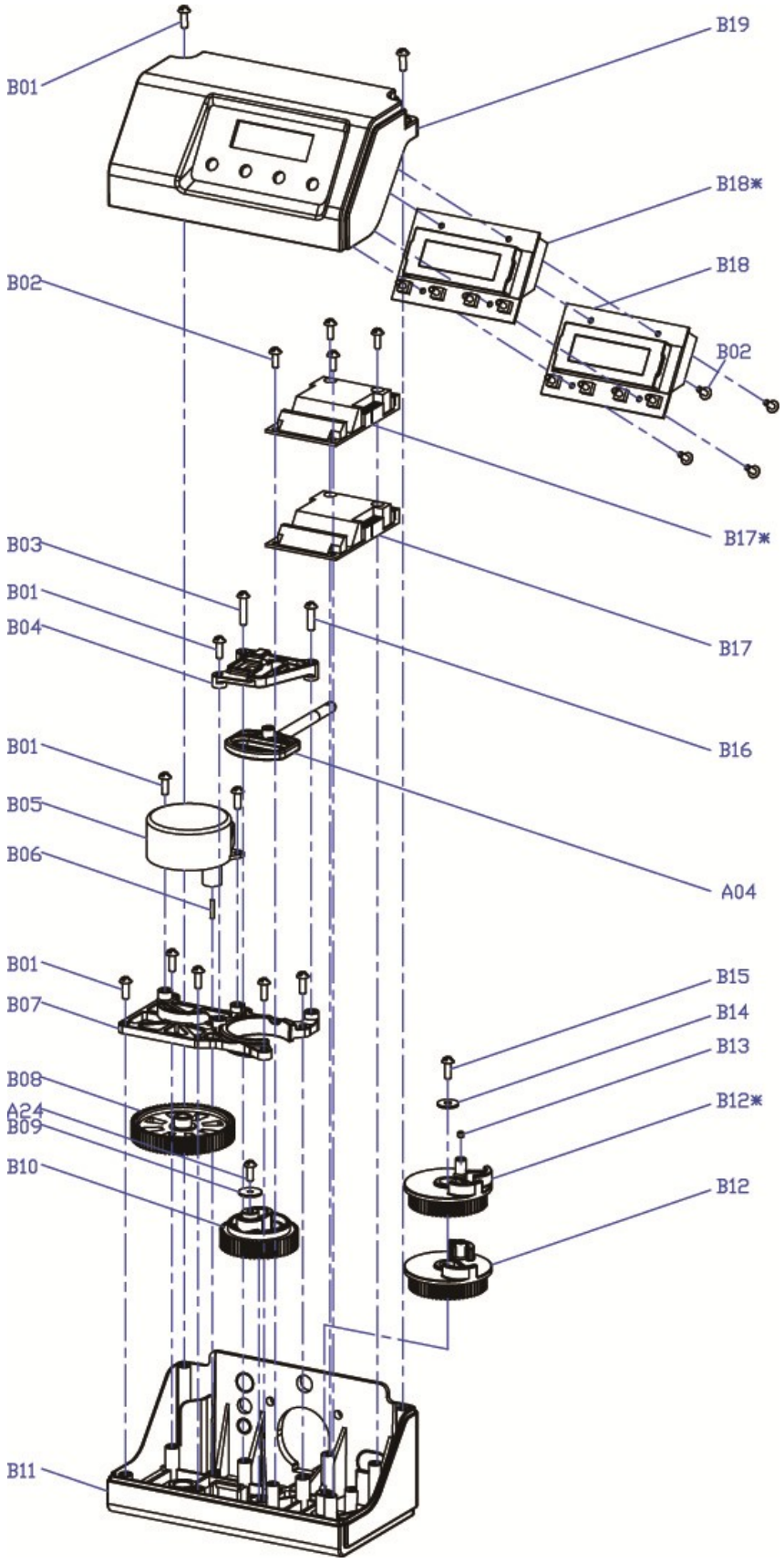

Free Manual PDF downloaded from: https://watersoftenerplus.com/manuals/_pdf//manual.pdf
Back to product page: https://watersoftenerplus.com

Power Head Parts List

85HE POWER HEAD (DOWNFLOW)				
Replacement Part Number	MFG Part Number	Part Description	DWG #	Quantity
	5056084	Screw-ST3.5X13	B01	10
	5010037	Screw-ST2.9X10	B02	9
	13000416	Screw-ST3.5X25	B03	1
	5031007	BNT85HE Piston Rod Guide Plate	B04	1
	5056510	Motor-12v/2rpm	B05	1
	5030014	Motor Power Cable		1
	11700005	Wire Connector		2
	5056098	Motor Pin	B06	1
	5031006	BNT85HE Mounting Plate	B07	1
	5030009	BNT85 Drive Gear	B08	1
	13000426	Screw-ST2.9X13(Large Washer)	A24	2
	5056139	Washer-3x13	B09	1
	5030007	BNT85 Main Gear	B10	1
	5030005	BNT185 Housing	B11	1
	5031017	BNT85HE Brine Gear(Downflow)	B12	1
	5010023	Magnet(3×2.7)	B13	1
	5056141	Washer-4x12	B14	1
	5056166	Screw-ST4.2X12(Large Washer)	B15	1
	5031016	BNT85HE Piston Rod	A04	1
	5010036	Screw-ST3.5X16	B16	1
	5031026	BNT85HE Main Pcb(Downflow)	B17	1
	5010031	Meter Assembly		1
	5010046	Meter Strain Rlief		1
	5010029	Power Cable		1
	5010035	Power Strain Rlief		1
	19010105	Wire Rope-3×100		2
	5031024	BNT85HE Display(Downflow)	B18	1
	5030021	BNT85 Wiring Harness		1
	5030003	BNT85 Cover	B19	1

Free Manual PDF downloaded from: https://watersoftenerplus.com/manuals/_pdf//manual.pdf
Back to product page: https://watersoftenerplus.com

Trouble Shooting

Issue	Possible Cause	Possible Solution
A. Unit fails to initiate a regeneration cycle.	1. No power supply.	Check electrical service, fuse, etc.
	2. Defective circuit board.	Replace faulty parts.
	3. Power failure.	Reset time of day.
	4. Defective meter.	Replace turbine meter.
B. Water is hard.	1. By-pass valve open.	Close by-pass valve.
	2. Out of salt or salt level below water level.	Add salt to tank.
	3. Plugged injector / screen.	Clean parts.
	4. Flow of water blocked to brine tank.	Check brine tank refill rate.
	5. Hard water in hot water tank.	Repeat flushing of hot water tank required.
	6. Leak between valve and central tube.	Check if central tube is cracked or o-ring is damaged. Replace faulty parts.
	7. Internal valve leak.	Replace valve seals, spacer, and piston assembly.
	8. Reserve capacity setting too low.	Increase reserve capacity.
	9. Not enough capacity.	Increase salt dosage.
C. Salt use is high.	1. Refill time is too high.	Check refill time setting.
	2. Defective flow control.	Replace.
D. Low water pressure.	1. Iron or scale build up in line feeding unit.	Clean pipes.
	2. Iron build up inside valve or tank.	Clean control and add resin cleaner to clean bed. Increase regeneration frequency.
	3. Inlet of control plugged due to foreign material.	Remove piston and clean control valve.
	4. Deteriorated resin. (Maybe caused from high chlorine or chloramines.)	Re-bed unit. Consider adding carbon pre-treatment.
E. Resin in drain line.	1. Air in water system.	Check well system for proper air eliminator control.
	2. Incorrect drain line flow control (DLFC) button.	Check for proper flow rate.
F. Too much water in brine tank.	1. Plugged injector or screen.	Clean parts.
	2. Valve not regenerating.	Replace circuit board, motor, or control.
	3. Foreign material in brine valve.	Clean parts.
	4. Unit not drawing brine.	Check for vacuum leak in brine line connections.
G. Unit fails to draw brine.	1. Drain line flow control is plugged.	Clean parts.
	2. Injector or screen is plugged.	Clean parts.
	3. Inlet pressure too low.	Increase pressure to 25 PSI.
	4. Internal valve leak.	Replace seals, spacers, and piston assembly.
	5. Safety valve closed.	Check for leak in brine line connections. Replace safety float assembly.
	6. Vacuum leak in brine line.	Check for leak in brine line connections. Tighten all connections.
	7. Drain line has kink in it or is blocked.	Check drain line.
H. Valve continuously cycles.	1. Defective position sensor PCB.	Replace faulty parts.
I. Flow to drain continuously.	1. Valve settings incorrect.	Check valve settings.
	2. Foreign material in control valve.	Clean control.
	3. Internal leak.	Replace seals, spacers, and piston assembly.
	4. Piston is stuck in position. Motor may have failed or gears have jammed or disengaged.	Check for power to motor. Check for loose wire. Check for jammed gears or gears disengaged. Replace faulty parts.
J. Valve makes beeping sound.	1. The piston has not advanced to the next cycle position properly.	Check for power to motor. Check for loose wire. Check for jammed gears or gears disengaged.

Free Manual PDF downloaded from: https://watersoftenerplus.com/manuals/_pdf//manual.pdf
Back to product page: https://watersoftenerplus.com

Warranty

Canature WaterGroup guarantees that your new water conditioner is built of quality material and workmanship. When properly installed and maintained, it will give years of trouble free service.

Five Year Limited Warranty

Canature WaterGroup will replace the salt tank or cabinet tank, the fibreglass mineral tank, the ion exchange resin, and valve parts provided the failure is due to a defect in material or workmanship and not the result of damage from any of the conditions described in the general conditions of this warranty.

General Conditions

Damage to any part of this water conditioner or filter as a result of misuse, misapplication, neglect, alteration, accident, installation or operation contrary to our printed instructions, damage to ion exchange resin and seals caused by chlorine / chloramines in the water supply, or damage caused by any force of nature is not covered in this warranty. We will repair or replace defective parts if our warranty department determines it to be defective under the terms of this warranty. Canature assumes no responsibility for consequential damage, la -bour or expense incurred as a result of a defect or failure.

Free Manual PDF downloaded from: https://watersoftenerplus.com/manuals/_pdf//manual.pdf
Back to product page: https://watersoftenerplus.com