TC-M SERIES
Water Treatment System
Owner's Manual



RainSoft

TC-M D & CD series, TC-M 75 CV, TC-M 100 CV and TC-M 150 CV models are tested and certified by NSF International to NSF/ANSI Standard 44 and CSA B483.1 for the reduction of the claims specified on the Performance Data Sheet.

Part No. 50029
Rev C 09/24

TABLE OF CONTENTS

Information on Water Treatment Systems 3

Application Limitations 3

Operational Specifications 3-4

Product Certification Information. 4

Installation Instructions. 6–9

System Start Up 10-11

Salt Requirements 12

Maintenance Requirements 12

An Overview of the Regeneration Process 13

TC-M Display. 13

TC-M Control Navigation 14

Regeneration Settings 14

Installer Mode 14

System Errors. 15

System Testing 15

Exploded Views and Parts Lists 16

Troubleshooting Guide 19

Warranty Information 20

Congratulations on your purchase of a RainSoft water treatment system.

This Owner's Manual is designed to assist with the operation, maintenance, and installation of your water treatment system. It is our sincere hope that this manual is clear, concise, and helpful to you as a new owner.

Questions? If you have any questions regarding the installation, operation, or servicing of this system, please contact your local RainSoft Dealer. Your local RainSoft Dealer is familiar with your particular water conditions, and is able to address your concerns promptly and efficiently.

INFORMATION ON WATER TREATMENT SYSTEMS

There are many misconceptions that have been developed about water treatment systems. The most common topic of confusion is the amount of sodium (Na), not table salt (NaCl), that is added to the water from a water conditioner. In reality, ion exchange does replace the hardness ions in your water with sodium ions, but the common misconception is the amount used.

For every one (1) grain of hardness, the exchange process will deliver approximately eight (8) milligrams of sodium per one (1) liter of water. The amount of sodium present in a standard eight (8) ounce glass of treated water, that was 10 grains hard prior to treatment, would be around 19 milligrams of sodium. This is an insignificant amount of sodium considering a typical slice of white bread has about 140 milligrams.

Another common misconception that needs mentioning is the amount of salt used by the conditioner to regenerate the system. In the past, water conditioners used more salt to regenerate, but that was due to old technology and standards. Water conditioners do use salt for regeneration, but the amount of salt varies by water consumption and hardness levels. Fortunately, today's technology allows us to dispense just the right amount of salt for maximum efficiency, based on your individual water consumption needs.

Helpful Tip: Another common misconception of water treatment systems is the idea that soft water will produce clear ice cubes. Cloudy or white, hazy ice cubes are caused by air that is slowly being released from the water during the freezing process, which has nothing to do with the performance of your system.

APPLICATION LIMITATIONS

On hardness levels of 60 grains and higher, the system may not achieve a hardness of less than 1 grain; due to high Total Dissolved Solids, some bleed through is possible. Bleed through can also be caused by sodium levels higher than 1,000 parts per million. In either case, your system can be programmed to minimize these effects. See your RainSoft Dealer for details.

Important Note: This system may be installed on well water or municipality treated water supplies.

Chlorine or Chloramine levels on municipality treated water should not exceed four (4) parts per million.* When Chlorine or Chloramine levels are four (4) parts per million* or greater, it can have adverse effects on your system. In applications where high levels are a concern, pre-filtration is necessary to reduce the Chlorine or Chloramine to an acceptable level. See your RainSoft Dealer for details.

Important Note: Most municipality treated water supplies contain chlorine as a disinfectant. Many municipalities also inject ammonia into the water supply, creating chloramine.

When this system is installed on water with Ferrous iron, also known as clear water iron, the maximum range of removal is based on local water conditions. The range is generally two (2) to 10 parts per million. Your equipment may require special programming, along with an additive to the brine tank, to maximize the equipment's ability to remove iron. See your RainSoft Dealer for details.

Important Note: Iron fouled resin is not eligible for warranty replacement.

*Maximum disinfectant level of Chlorine or Chloramine recommended from the EPA.

OPERATIONAL SPECIFICATIONS

Plumbing:	3/4 inch to 1 ¼ inch I.D.
Drain Line:	1/2 inch I.D.
Water Pressure:	20 psi – 120 psi (1.38 bar – 6.89 bar)
Operating Temperatures:	40 – 100°F (4.4 – 37.8°C)

Electrical Requirements

A properly grounded alternating current supply (110 VAC 60 Hz) is required for the operation of this system. Please check the power supply for the correct voltage requirements.

Important Note: This system requires the use of the included power supply (24 VDC).

Bypass Valve

The bypass valve enables you to bypass the system in situations of emergency leaks in the equipment, service calls.

Important Note: The manually operated bypass valve enables the conditioner to be isolated from the water service line for maintenance and service. It also maintains the continuity of the water supply when the conditioner is disconnected.

OPERATIONAL SPECIFICATIONS continued

Existing Plumbing Conditions

Plumbing should be free from lime and/or iron buildup. Piping that contains large amounts of lime and/or iron should be replaced.

Additional Specifications

- Do not install this system where water is microbiologically unsafe or of unknown quality without adequate disinfection before or after the system.
- This system must be installed in accordance with all applicable state and local laws and regulations.
- The Commonwealth of Massachusetts Plumbing Code 248 CMR shall be adhered to. A licensed plumber shall be used for this installation.
- This system must be installed in an area not affected by extreme heat, cold or the elements. The selected installation area must be adequate for easy service and accessibility.
- This system is designed to treat cold water only. The installation must be on a cold water supply.

PRODUCT CERTIFICATION INFORMATION

TC-M D & CD series, TC-M 75 CV, TC-M 100 CV and TC-M 150 CV models are tested and certified by NSF International to NSF/ANSI Standard 44 and CSA B483.1 for the specific performance claims as verified and substantiated by test data. See the performance data sheet for specific reduction claims.

Products also evaluated by NSF International and determined to possess weighted average lead content of <=0.25% and complies with lead content requirements for "lead free" plumbing as defined by California, Vermont, Maryland, and Louisiana state laws and the U.S. Safe Drinking Water Act.

Important Note: The supplied test strip only tests for hardness. A reduction of hardness is also an indication that barium and radium are being reduced*.

* Water treatment devices sold to retail consumers in California, accompanied by certain health claims, must be registered by the California State Water Resources Control Board. The TC-M Series is not registered in the State of California for the purpose of making health claims.

DATA CHART FOR TC-M SYSTEMS D & V RESIN

Model	Tank Size (inches)	Cation Exchange Resin (cu. ft.)	Max. Service Flow (gpm)	Drain Flow (gpm)	psi Drop	High Salting	Medium Salting	Low Salting	Efficiency*
TC-M 50ss D	10 x 18	0.6	9.5	2.0	9.0	19,000 @ 9.0 lbs.	15,500 @ 6.0 lbs.	7,200 @ 1.8 lbs.	4,010@ 1.8 lbs.
TC-M 50ss CD	10 x 18	0.6	9.5	2.0	8.0	19,000 @ 9.0 lbs.	15,500 @ 6.0 lbs.	7,200 @ 1.8lbs.	4,010@ 1.8 lbs.
TC-M 75 D	8 x 44	0.75	8.6	1.5	15.0	26,100 @ 11.2 lbs.	21,300 @ 7.5 lbs.	9,900 @ 2.25 lbs.	4,400@ 2.25 lbs.
TC-M 75 CD	8 x 44	0.75	9.2	1.5	15.0	26,100 @ 11.2 lbs.	21,300 @ 7.5 lbs.	9,900 @ 2.25 lbs.	4,400@ 2.25 lbs.
TC-M 100 D	10 x 44	1.0	10.0	2.0	10.0	34,500 @ 15.0 lbs.	30,500 @ 10.0 lbs.	14,200 @ 3.0 lbs.	4,750@ 3.0 lbs.
TC-M 100 CD	10 x 44	1.0	10.0	2.0	11.0	34,500 @ 15.0 lbs.	30,500 @ 10.0 lbs.	14,200 @ 3.0 lbs.	4,750@ 3.0 lbs.
TC-M 100s D	10 x 35	1.0	10.0	2.0	10.0	34,500 @ 15.0 lbs.	30,500 @ 10.0 lbs.	14,200 @ 3.0 lbs.	4,750@ 3.0 lbs.
Tc-M 100s CD	10 x 35	1.0	10.0	2.0	11.0	34,500 @ 15.0 lbs.	-30,500 @ 10.0 lbs.	14,200 @ 3.0 lbs.	4,750@ 3.0 lbs.
TC-M 150 D	10 x 54	1.5	9.0	2.0	10.0	51,800 @ 22.5 lbs.	45,800 @ 15.0 lbs.	21,400 @ 4.5 lbs.	4,750@ 4.5 lbs.
TC-M 150 CD	10 x 54	1.5	10.4	2.0	15.0	51,800 @ 22.5 lbs.	45,800 @ 15.0 lbs.	21,400 @ 4.5 lbs.	4,750@ 4.5 lbs.
TC-M 75 CV	8 x 44	0.75	9.2	1.5	14.0	26,100 @ 11.2 lbs.	21,300 @ 7.5 lbs.	9,900 @ 2.25 lbs.	4,400 @ 2.25 lbs.
TC-M 100 CV	10 x 44	1.0	10.0	2.0	12.0	34,500 @ 15.0 lbs.	30,500 @ 10.0 lbs.	14,200 @ 3.0 lbs.	4,756@ 3.0 lbs.
TC-M 150 CV	10 x 54	1.5	10.4	2.0	15.0	51,800 @ 22.5 lbs.	45,800 @ 15.0 lbs.	21,400 @ 4.5 lbs.	4,756@ 4.5 lbs.

*The conditioners are efficiency rated according to NSF/ANSI 44. The efficiency of the conditioner is valid only at the stated salt dosage.

Higher or lower pressure will affect the efficiency of the system.

If the iron content of the water to be soft-ened is zero, and the hardness level is less than 20 gpg, we suggest you choose the low salt setting for the most efficient operation. Please go to page 13 for the instruction of how to set the pounds of salt.

INSTALLATION INSTRUCTIONS

1. **Safety Precautions**
   - To prevent an accident and/or injury, do not hoist the unit over your shoulder. Use a hand truck to transport the unit.
   - Do not lay the unit on its side.
   - Wear safety glasses and work gloves during installation

Important Note: For Massachusetts Residents Only: The Commonwealth of Massachusetts Plumbing Code 248 CMR shall be adhered to. A licensed plumber shall be used for this installation.

2. **Test the Raw Water**
   - If water contains iron, manganese or hydrogen sulfide, a separate iron removal system is suggested to be installed prior to the conditioner, consult with your local dealer.

3. **Check the Water Pressure**
   - Use a pressure gauge to confirm that the water pressure does not exceed 120 psi. If the water pressure exceeds this limit, install a pressure regulator on the inlet pipe of the unit. The minimum water pressure for a conditioner is 20 psi. 60 psi is the optimum operating pressure.

Important Note: Water pressure often spikes higher at night. We recommend adding a pressure regulator if your daytime pressure reading is higher than 80 PSI.

4. **Locate a Site for the System**
   - There are three primary requirements needed for a site: the main water source, an air-gap drain and a grounded electrical connection. Locate the system as close to these items as practical. Drain lines over 50 feet long, may need to be increased in size to allow proper flow.
   - Place the system in the desired location. The location should have a level, smooth, and clean surface.
   - If the system is located outdoors, protect the unit from direct sunlight. Direct sunlight can damage the fiberglass and other system components. If necessary, build a box or shed. In some installation environments you may choose to partially bury the system. This is done primarily for aesthetics, however this will add stability to the system as well.
   - We recommend all systems installed outdoors include the valve weather cover part # 52562.

Helpful Tip: The drain may be a floor drain, a sewer trap, utility sink, vent stack, dry well, etc., depending on local plumbing codes.

Important Note: The system can only be installed outdoors in climates that do not reach freezing levels.

5. **Install the Valve Head**
   - Remove the cap plug from the tank.
   - Lubricate the riser pipe O-ring and tank O-ring with the Dow 111 silicone-based lubricant or equivalent.
   - Attach the supplied upper basket to the bottom of the control valve; twist to lock in place. Do not use if water contains any amount of iron.
   - Align the upper basket with the riser pipe and slowly lower the control valve onto the riser pipe, using a twisting motion.
   - Align the control valve with the tank. Push down on the control valve and continue to turn it clockwise until the valve O-ring seals against the tank (see figure 1).

Important Note: Do not over-tighten the valve to the tank.

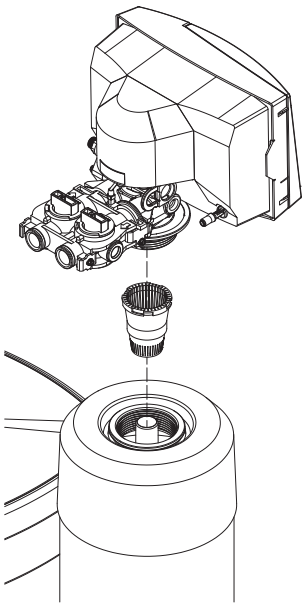

Figure 1

6. **Turn Off the Water and Drain the Plumbing**
   - Turn off the water at the meter or the pressure tank.
   - To drain the plumbing system, open all faucets in the house and flush the toilets. The water will drain out of the lowest faucet or outlet.
   - Do not sweat pipes with water in them or while attached to the system; steam will damage the plastic parts in the valve.
   - Do not point the soldering torch directly at the mineral tank or control valve. These composite materials will last a lifetime, but cannot withstand the intense heat from a torch.
   - Avoid short connections of pipe between the system and the water heater. If you cannot avoid a short connection, move the system to another location. As a last resort, install a heat trap or check valve. If this causes "water hammer", install a water hammer suppressor.
   - If available, run an untreated water line to outside faucet or provide a hose connection on untreated line prior to system.

Helpful Tip: Draining the plumbing will allow air to enter the plumbing system.

Important Note: Short connections of pipe may allow hot water to back up into the system. Recommend at least 10 linear feet or three (3) linear meters of pipe between Conditioner and Water Heater.

7. **Provide Untreated Water for Irrigation or Outdoor Watering**
   - If available, run an untreated water line to outside faucet or provide a hose connection on untreated line prior to system.

8. **Install the Pipe Connector (Yoke) to the Bypass Valve**
   - Once the plumbing is complete, connect the yoke to the bypass valve (see figure 2).

Important Note: The bypass valve is not designed to withstand heat from soldering or twisting from the attached threaded connections.

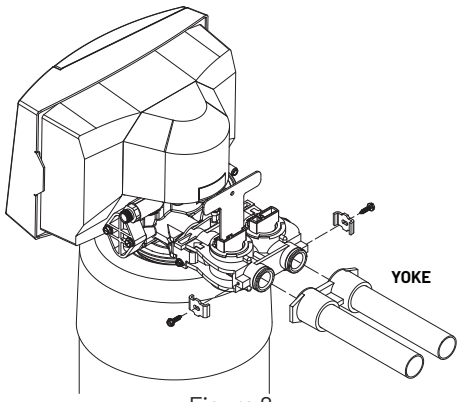

Figure 2

   - Support all plumbing connected to the yoke.
   - Connect the raw water supply to the inlet pipe connection of the yoke. When looking at the front of the system, the inlet is the pipe connection on the right side of the valve (see figure 3). The arrow molded into valve indicates the direction of flow.

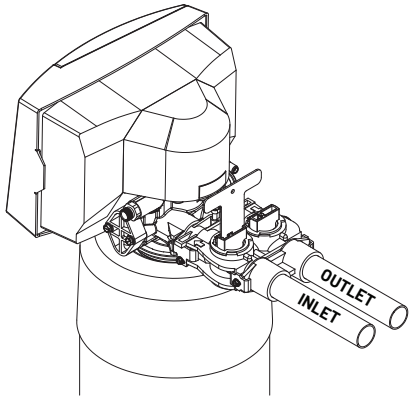

Figure 3

   - Connect the treated water pipe to the outlet pipe connection on the yoke. When looking at the front of the system, the outlet is the pipe connection on the left side of the valve (see figure 3). The arrow molded into the valve indicates the direction of flow.
   - Ensure that the bypass valve is in bypass position. The valve handles should be perpendicular to the pipes (see figure 4).

Important Note: Too much weight on the plumbing connections will cause a leak.

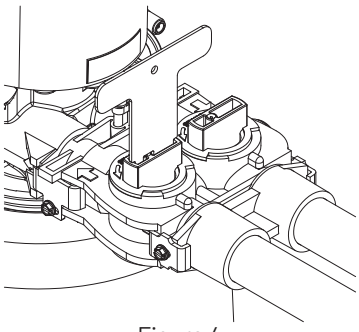

Figure 4

9. Install the Drain Line and Air Gap (Air Gap Not Supplied)

- For all drain lines, use at least a 1/2 inch I.D. line.
- Connect the drain line to the drain outlet on back of the valve, opposite the inlet connection (see figure 5). A fitting is require to connect the female pipe thread to the drain line. Run the drain line to the air gap.

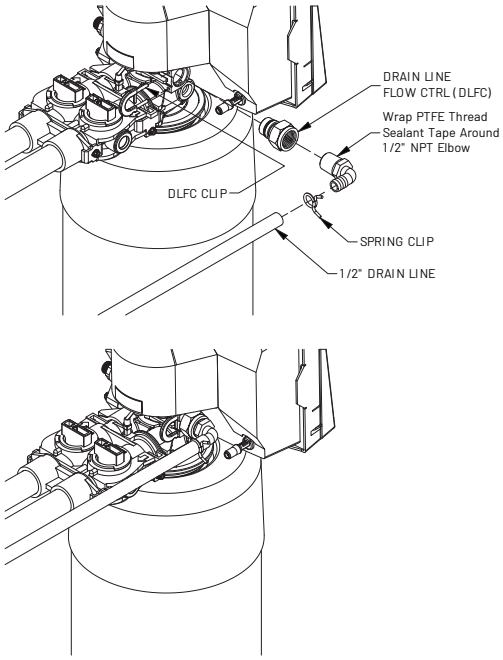

Figure 5

- The air gap should be installed between the end of the drain line and the drain to prevent possible back siphoning (see figure 6).

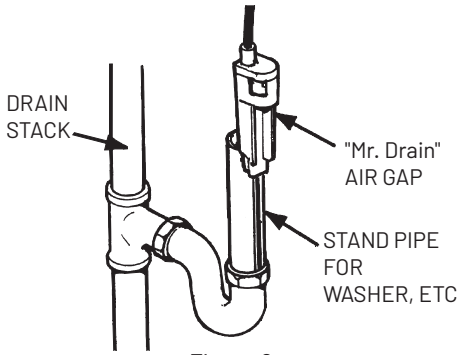

Figure 6

Important Note: The air gap should be two times the diameter of the drain line or a minimum of two inches. Please check your local plumbing codes to ensure compliance.

10. Install the Brine Safety Float

- Insert the brine well into the brine tank (see figure 7.1)
- Attach the brine well to the brine tank with the overflow elbow (see figure 7.2).b
- Insert the safety float into the brine well. The top of the safety float should be about 5 inches from the overflow elbow (see figure 7.3)

Important Note: Systems 250 & 400 use a larger brine tank than the one shown. "SS" systems use a similar tank but half the size of the one shown.

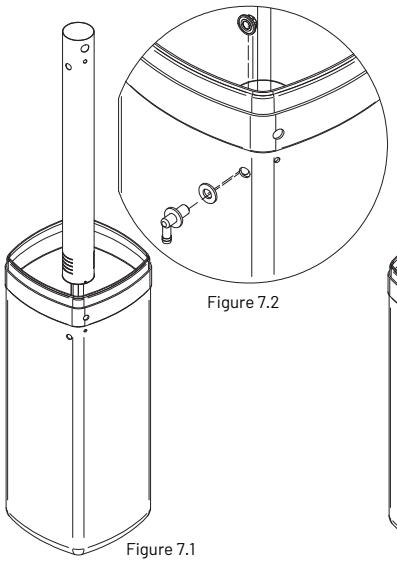
Figure 7.1

Figure 7.2

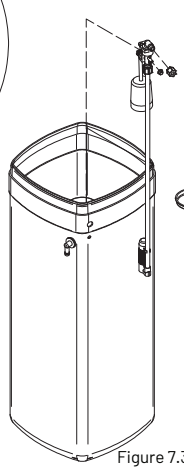
Figure 7.3

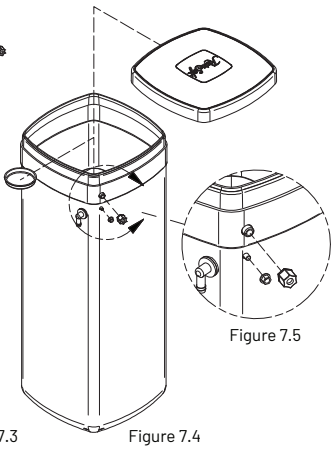
Figure 7.4

Figure 7.5

Figures 7.2, 7.3, 7.4, and 7.5

11. Install the Brine Line

- Slide the brass compression nut over the end of the brine line, followed by the ferrule and tube support. Attach the brine line to the brass fitting on the right side of the valve (see figure 8).
- Insert a tube support into the other end of the brine line and push the brine line into the brine safety float elbow. Use a locking clip to secure the connection (see figure 8).

Important Note: for TC-M-CAB Models: The overflow elbow is located on the back of the brine tank (not shown).

Important Note: The brine overflow line must not be higher than the overflow elbow on the brine tank.
(This is a gravity overflow.)

Overflow Line connection is only used if brine valve fails.

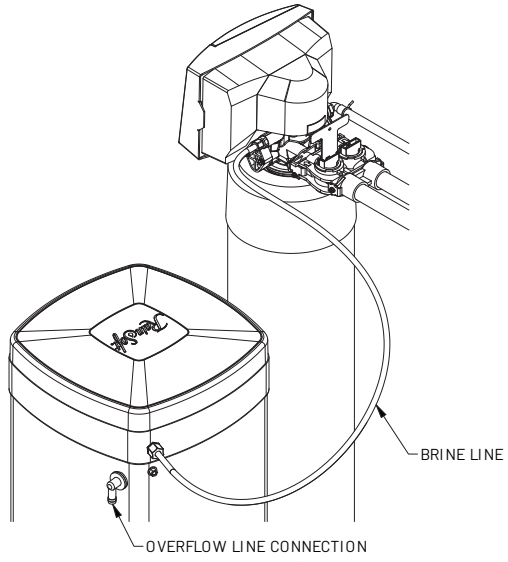

Figure 8

12. Install the Brine Overflow Line (indoors)

- Run a 1/2 inch I.D. brine overflow line from the overflow elbow on the side of the brine tank to an approved drain (see figure 8).

13. Attach the Electrical Connection

- Insert the barrel plug from the DC power supply into the mating jack in the back of the control box .
- Plug the DC power supply into a 110 VAC 60 Hz or 230 VAC 50 Hz outlet.

SYSTEM START UP

1. **Turn on the Water and Check for Leaks**
   - Close all faucets and turn the water back on at the water meter or pressure tank.
   - Check for leaks. If a leak is present, drain the plumbing again before soldering.

2. **Flush the Remaining Debris from the System**
   - Open the cold water faucet on your bathtub.
   - Allow the system to flush the remaining dirt and debris into the bathtub, until the water runs clear.
   - Open all remaining faucets and allow the plumbing to release any trapped air in the system.
   - Close all of the faucets.

Helpful Tip: Flushing the system will prevent dirt and debris from entering the valve.

3. **Open the Bypass Valve**
   - Move the bypass valve handles to the service position. The valve handles should be parallel to the pipes (see figure 9).
   - Open a cold water tap and allow the appliance to flush for 20 minutes or until approximately 100 gallons has passed through the appliance.

Important Note: All air should be purged from the bypass valve. To purge any trapped air from the bypass seal pocket, open and close the bypass valve 2-3 times and allow the water to run from the system.

Helpful Tip: It is common for new systems to have some color in the water. The color should disappear after you completely flush the system.

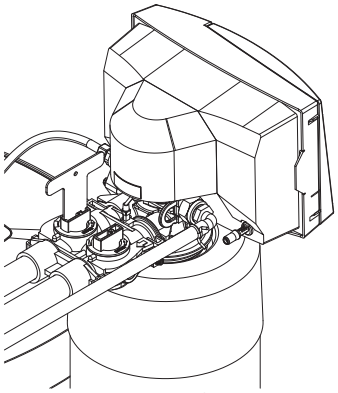

Figure 9

4. **Flush the Hot Water Heater**
   - Run hot water in the bathtub until the water tests soft.

5. **Add Salt to Brine Tank / Control Settings**
   - See **Salt Requirements** before filling your brine tank with salt.
   - When using Block Type Salt, please review Stacking Figures on page 11 for correct and incorrect stacking methods of Salt.

Important Note: Systems 250 & 400 use a larger brine tank than the one shown. “SS” systems use a similar tank but half the size of the one shown.

Important Note: Cabinet Models are all in one systems that do not require separate brine tank.

STACKING BLOCK SALT - 25 lbs BLOCKS

INCORRECT STACKING

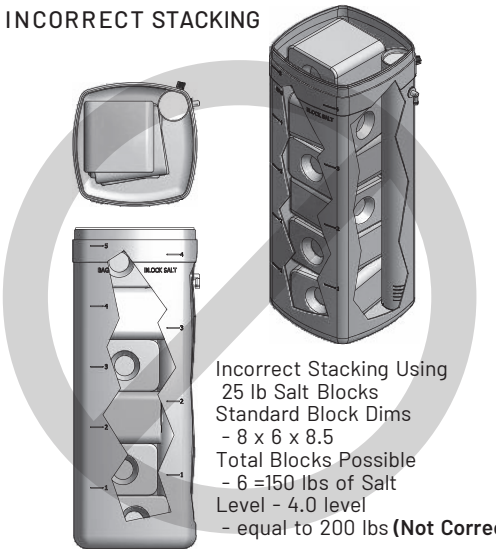

Incorrect Stacking Using
25 lb Salt Blocks
Standard Block Dims
- 8 x 6 x 8.5
Total Blocks Possible
- 6 =150 lbs of Salt
Level - 4.0 level
- equal to 200 lbs **(Not Correct)**

CORRECT STACKING

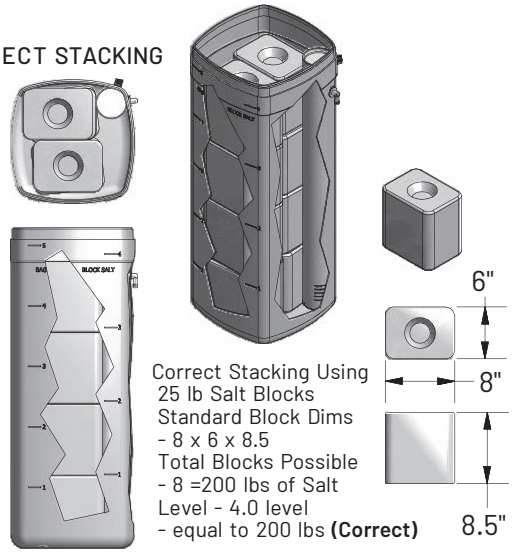

Correct Stacking Using
25 lb Salt Blocks
Standard Block Dims
- 8 x 6 x 8.5
Total Blocks Possible
- 8 =200 lbs of Salt
Level - 4.0 level
- equal to 200 lbs **(Correct)**

STACKING BLOCK SALT - 50 lbs BLOCKS

INCORRECT STACKING

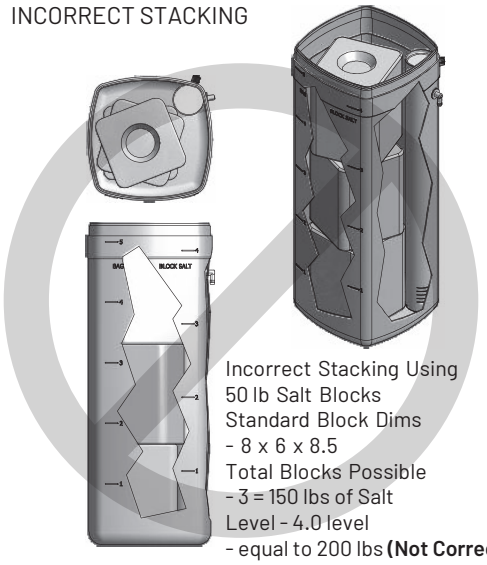

Incorrect Stacking Using
50 lb Salt Blocks
Standard Block Dims
- 8 x 6 x 8.5
Total Blocks Possible
- 3 = 150 lbs of Salt
Level - 4.0 level
- equal to 200 lbs **(Not Correct)**

CORRECT STACKING

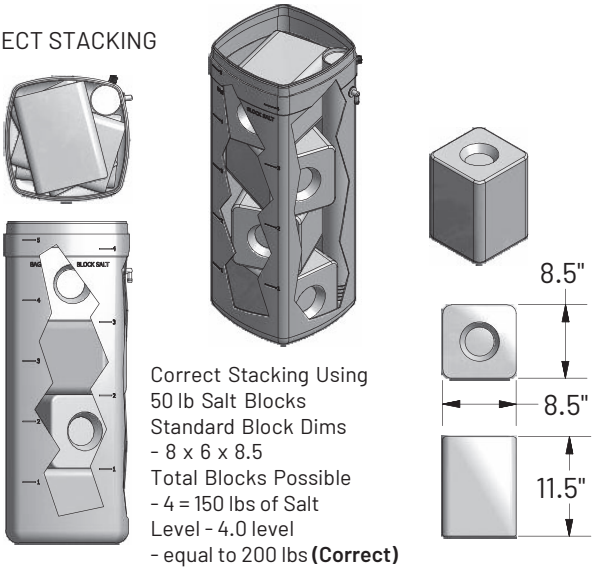

Correct Stacking Using
50 lb Salt Blocks
Standard Block Dims
- 8 x 6 x 8.5
Total Blocks Possible
- 4 = 150 lbs of Salt
Level - 4.0 level
- equal to 200 lbs **(Correct)**

SALT REQUIREMENTS

Two salt types are recommended for water conditioners:

- Block Salt: Water conditioner block salt is low in impurities, and will not cake in the salt container.
- Bag Salt: Bag salt (Sodium Chloride) may be described on the packaging as pellet, flake, crystal, or solar Salt.

Any of these salts are fine to use with your water conditioner system as long as they are clean, high purity and labeled specifically for use with water softeners.

Important Note: Salt used for melting ice, such as rock salt, is typically high in impurities and should not be used, since dirt can clog the brine system. Very fine, granulated salt is also not recommended. The use of granulated salt may cause service problems.

Salt Blocks sold as cattle licks should not be used, since these may be high in impurities.

You can also use potassium chloride instead of sodium chloride. Potassium chloride is usually available only in bags and sold specifically for this purpose. Consult your RainSoft Dealer before use of potassium.

MAINTENANCE REQUIREMENTS

Resin Cleaners

It is always wise to provide preventative maintenance for your system. If small amounts of iron are present in your water, use a salt containing iron remover or add RainSoft water conditioner cleaner to the salt tank when adding salt. If an excessive amount of iron is present in your water, we recommend the installation of an iron filter before the conditioner. See your RainSoft Dealer for details.

Sanitize the Conditioner

It is common to sanitize your Resin tank from time to time, especially if any long periods of low water use is experience in the Home. To do so;

Mix a 3/4 cup of common (unscented) 5.25% household bleach with one (1) quart of water. Pour this solution into the brine well.

Initiate a manual regeneration. The solution is drawn into the conditioner during the regeneration process. See "Manual Regeneration"

After the system has completed a manual regeneration, the conditioner will be sanitized and ready for use.

Important Note: Do not pour undiluted bleach into the water conditioner.

Cleaning the Regeneration Valve

The regeneration valve body is designed to last a lifetime, but from time to time it may be necessary to clean and lubricate the moving parts. Your water quality and the amount of regenerations necessary will affect this maintenance schedule. Your local RainSoft Dealer is knowledgeable in the different water qualities and will have the necessary parts to complete this service.

Helpful Tip: Resin cleaner will prevent the treatment media from becoming iron fouled. We recommend that this service be performed every three years or earlier if necessary.

Important Note: If you use a cleaner containing nitric acid or other strong oxidizing agents, please use caution and follow instructions carefully.

Testing Your Water

If you are relying on this system for barium and radium reduction, we recommend testing your water periodically (2 times a year) with a hardness test strip (supplied) to ensure that the system is performing properly, and that hardness, barium, and radium are being reduced. Additional hardness test strips are available at no charge from RainSoft. Please call 1-800-860-7638 for your free two year supply.

In between testing, you can easily monitor the system's performance in the shower or while washing your hands. The feeling of soft water should be present on your skin.

We recommend that this service be performed every three years or earlier if necessary.

AN OVERVIEW OF THE REGENERATION PROCESS

Your RainSoft TCM Water Conditioner performs a periodic regeneration cycle to clean mineral bed and restore its capacity. How often it regenerates depends on your water use, incoming water hardness, and several other factors, but 1 - 2 regenerations per week can be typical. An automatic regeneration will never occur more than once a day, and the Regen Time is set to occur when you are unlikely to be using water (Default setting is 2:00 AM). Here is an overview of the regeneration process.

Regen Process:

Cycle 3: Backwash
When time for the regen to start - the system will do a 10 second count down, then the valve moves to the backwash position for the start of the actual regeneration of the system. In the backwash position, the drain is in the open position, allowing water in the pressure tank to flow in reverse. With water flowing from the bottom up, lifting and cleaning the mineral bed inside the pressure tank. This removes any dirt or particles that have accumulated on the top of the mineral bed. The remaining regeneration cycles, all the water flowing through the tank will go to the drain to allow for water movement. When using water in the home during this regeneration process, untreated water is available to the house bypassing thru the valve until the regeneration process is complete.

CYCLE 4: Brine Draw / Slow Rinse
Now that the system has completed cycle 3 and backwashed for the set time, the valve moves to the brine draw position. In this position, the valve creates a vacuum to pull the brine solution out of the brine tank. The brine solution flows down slowly through the mineral bed. This is the ion exchange process, when the hardness ions that have attached to the softening resin exchange with the positively charged sodium ions from the brine solution and sending the hardness ions to the drain. After all the brine is drawn out of the brine tank, the system continues to slowly rinse the mineral bed, allowing time for all the resin beads to be recharged and rinse out any excess brine.

CYCLE 5: Brine Draw / Slow Rinse
With the brine solution fully rinsed out, the valve then moves to its final regeneration process cycle 5. Water flows top to bottom, quickly flowing water through the bed for a final fast rinse. This settles the mineral bed back down and serves as a final cleaning rinse. Upon completion of cycle 5 the Regeneration process is complete and the valve will move to Cycle 1 to fill the brine tank.

NOTE: The entire regeneration cycle, from backwash to fast rinse, takes one to two hours in most cases. The valve is in automatic bypass during these cycles and hard water will be supplied into the homes plumbing during this time only if water is in use.

CYCLE 1: Brine Tank Fill
The last step in the TCM Regeneration process is cycle 1. This cycle adds the set amount of water to the brine tank is preparation for the next regeneration. In the customer settings, the user will set the amount of salt the conditioner uses in the regeneration. That setting relates to the amount of water added in the brine tank. The salt in the tank will dissolve into the water to the point of saturation. The water will sit in the tank until the next regeneration, usually for several days, this is what brine make up time. Adding the salt after the Regeneration will give the salt plenty of time to dissolve and ensures that an accurate salt dose is used with the next regeneration.

When to use the Manual Regeneration Option:
The TCM Control has a manual regeneration mode available "Regen Now." See the "How to Initiate a Manual Regeneration" in this manual on how start a manual regeneration. An example of when to use a manual regeneration would be if you ran out of salt in your brine tank and hard water is flowing in your home. Fill the brine tank with Salt (See Add Salt to Brine Tank in the manual) then run a manual regen, or schedule one for later in the evening to complete a full regeneration of your system.

TCM DISPLAY

The TC-M Display / Home Screen displays the current conditions of your TC-M System. Press any button to turn on the display light. The normal operation of the display will scroll between the following information:

- Current Time of Day.
- Capacity Remaining in Gallons: This is Total Gallons of water before a regeneration will be required to run at the set regeneration time. When 0 Gallons remain, the TC-M will trigger a regen to be scheduled.
- Regen scheduled at set time: This will display when a regen is triggered to occur, displaying the time scheduled regeneration time.
- Reserve Capacity: When a Regen is triggered to occur, and the capacity remaining in Gallons is at 0 gallons, an automatic reserve capacity remaining will be listed along with Regen scheduled time. This Reserve Capacity is the total gallons remaining of treated water before your TC-M system will require any immediate regen. Reserve capacity is 25% of total capacity or a max of 200 gallons.
- ERROR Status: If a system Error is detected, the TC-M will activate the back light automatically indicating an ERROR is detected. Please review Error and contact your RainSoft dealer for more information

TCM CONTROL NAVIGATION

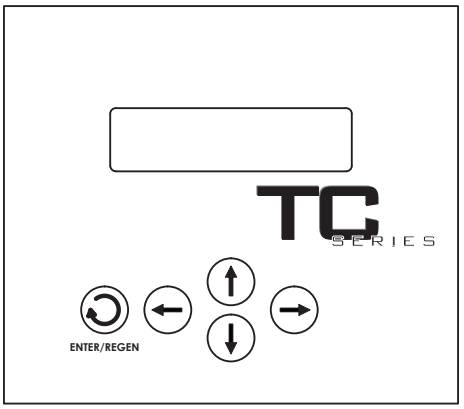

Setting the Time of Day

Press any button to activate the TC-M Display. Press the Right Arrow button. The SET TIME will scroll, use the up or down arrows to adjust the time of day. Press the Left/ Right Arrow buttons to toggle between hours & minutes or to Exit.

REGENERATION SETTINGS

Changing the Regeneration Time

Press any button to activate the TC-M Display. Press the Down Arrow button. The REGEN TIME will scroll, use the up or down arrows to adjust the time of day the regeneration will take place. Press the Left/ Right Arrow buttons to toggle between hours & minutes. Press left button to advance to Days Override, or to Exit press Left Arrow to until time is shown.

Days Override:

Press Left arrow past the Regen Time to get to Days Override setting. This setting will initiate a regen to be scheduled per the amount of days listed. Default is OFF. Use the up or down arrows to adjust the override settings to list how many days you wish the regens to take place. The flow meter normally will control this process and schedule regens per water use this.

Salt Setting, Lbs. of Salt to Regen:

Press Left arrow past the Days Override setting to get to the Salt setting "Lbs. to Regen". This setting is to change the amount of salt used per regen. Use the up or down arrows to adjust the lbs of salt settings. The Salt Setting does effect the efficiency of your softener; refer to the data chart on page 5. Consult with your local RainSoft dealer on what salt setting is best to use. Press Left Arrow to exit Regen Settings.

Hours Since Last Regeneration

To see the total hours that have paste since the last regeneration has taken place press the Left Arrow Button from the home screen. - Last Regen: ## Hrs.

How to Initiate a Manual Regeneration

Press any key to on the control to wake up the display. Press the Enter/ Regen Button to enter Regen Menu.

The TCM will display: Regen Now?: N

- Press the Up or Down button to change No to Yes. Press the Enter / Regen Button. The display will start a 10 second count down to begin full regeneration. To cancel manual regeneration, during the 10 second count down, press any button to stop the manual regen. When the count down ends, the Regeneration Process will begin.
- It is best to complete the Regeneration Process fully, however you can step each stage of the Regen process if initiated in error by pressing and holding the Right Arrow Button. To initiate a Regen Later?
- Follow the same steps from above, when Regen Now?:N, Press Enter / Regen button again to advance to Regen Later?:N. Press the Up or Down button to change No to Yes. Press the Enter / Regen Button.
- The display will return to the home screen. Display will scroll between, the Current Time of Day, Total Gallons Remaining, and Regen at: (Time set). Note this regen later time is set to regen at the normally schedule regen.

INSTALLER MODE

Programming the TCM System

Initial power up of the system, the control should automatically start Installation Mode; scrolling message will appear as "Install Mode": TCM. Follow steps below to setup your system.

To get to Install Mode at any time after installation Press and hold the Up Arrow until display scrolls "Enter Code." Press the Up Arrow 2 times to enter Install mode.

- **Install Mode:** Select system type by using the **Up** or **Down** arrows to change the system type. The types of systems are: TCM (Time Clock Metered), TC (Time Clock), F8 (Specialized Filter System), FLT (Filter System). **Adjust to TCM**
- Press the **Right arrow** to advance to Model Size: select model size by using the **Up** or

Down arrows. Model sizes listed are in reference to the size of system the control is installed on. Reference Page 5 for Model Sizes.

- Press the **Right arrow** button again to advance to the Media Type: select media type by using the **Up** or **Down** arrows. Media type is either V or D Resins. Reference Page 5 for Media Types.
- Press the **Right arrow** button to advance to the Backwash setting. The factory setting is 5 minutes, and the range is 5 to 30 minutes. Use the **Up** and **Down** arrows to adjust the setting.
- Press the **Right arrow** button to advance to the Brine and Rinse setting. The factory setting adjusts automatically based on model and salt dose. The setting can be increased but not decreased. Use the up button to adjust the setting.
- Press the **Right arrow** button to advance to the Fast Rinse setting. The factory setting is 2 to 7 minutes, based on model size. The setting can be increased but not decreased. Use the Up button to adjust the setting.
- Press the **Right arrow** button to advance to the Hardness setting Hardness (GPG). The factory setting is 10 grains per gallon, and the range is 1 to 200. Use the **Up** or **Down** buttons to adjust the setting. (GPG: Gallon Per Grain)
- Press the **Right arrow** button to advance to the Days Override or Days Between Regeneration setting. The factory setting is OFF, and the range is OFF to 30 days. Use the Up or Down buttons to adjust the setting. Since the TC-M system uses a flow meter to measure water use and regenerate only when needed, you will usually want to keep the setting at OFF.
- Press the **Right arrow** button to advance to the Lbs. to Regen: or Total pounds of salt to be used per Regeneration setting. The factory setting is to the Mid Range Salting and amounts vary by model size. Use **Up** or **Down** buttons to adjust the setting in one-half pound increments.

Important Note: The System Type, Model Size, Media Type are an important settings specific to the system installed. DO NOT change unless instructed to by a RainSoft Professional.

Important Note: In most cases Backwash, Brine & Rinse, and Fast Rinse Settings will not need to be adjusted from Factory Settings. Consult your RainSoft Professional if changes are desired.

Please refer to page 5 for capacity and salt setting to determine the correct adjustment for your specific model and desired salting.

IMPORTANT NOTE: If the iron content of the water to be softened is zero, and the hardness level is less than 20 gpg, we suggest you choose the low salt setting for the most efficient operation.

The low salt setting also meets California requirement of efficiency.

- Press the Right Arrow button to return to home screen. The TC will save changes and return to the home screen.

Important Note: When you exit the Customer Settings, the TCM will automatically save any changes that have occurred.

SYSTEM ERRORS

Your system is equipped to alert you for alarm situations: When Alarm is active, your TC-M will display the Error Message on the Display.

Contact your RainSoft Dealer if an Error Message is present.

Important Note: Adjustment to the Regen Later time will not change the Regen Time programmed in customer settings.

SYSTEM TESTING

To test the functions of your TC Product, example the key pad, the flow meter or motor. Press and hold the Up Arrow until display scrolls “Enter Code.” Press the Down Arrow 2 times to enter E-Test mode.

- Keypad test: Follow instructions to test, keypad push buttons.
- Flow Meter: Run water thru system or press Enter to skip.
- Motor Test: Once the Flow meter test is done the motor will run through each cycle quickly.

Test is complete press right arrow to enter Install Mode. Navigate Right arrow thru Install mode to exit.

If test fails press the right button to exit. Or cycle power to return to home screen.

VALVE EXPLODED VIEW

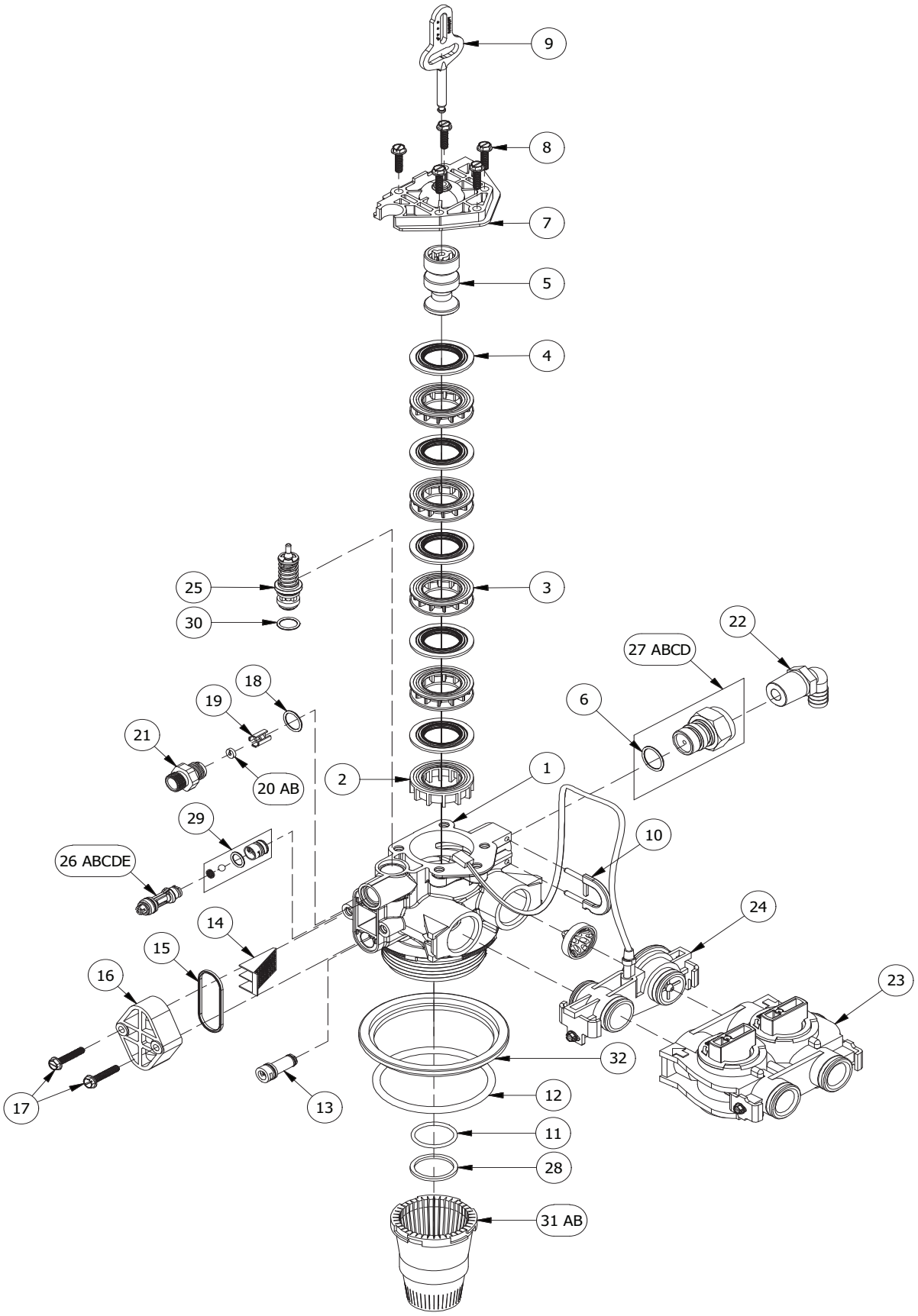

VALVE PARTS LIST

Item	Quantity	Part Number	Description
1	1	17863	COMPOSITE VALVE BODY
2	1	17864	SPACER END
3	4	17865	INTERNAL SPACER
4	5	17866	INTERNAL SEAL
5	1	18160	RETAINER & DOWN FLOW PISTON
6	1	13328	O-RING - 017
7	1	17869	END PLUG ASSEMBLY
8	5	17870	10-24 X .812 SCREW HEX WASHER HEAD
9	1	17871	PISTON ROD
10	1	17887	RETAINER DRAIN
11	1	17888	O-RING - 121
12	1	17889	O-RING - 336
13	1	17617	INJECTOR PLUG ASSEMBLY
14	1	17948	INJECTOR SCREEN
15	1	17949	INJECTOR SEAL
16	1	17950	INJECTOR CAP
17	2	17951	SCREW HEX WASHER HEAD 10-24 X 1.0
18	1	17958	O-RING - 015
19	1	17953	RETAINER BLFC BUTTON
20A	1	17954	FLOW CONTROL WASHER 0.25 GPM
20B	1	19610	REFILL FLOW CONTROL 0.5 GPM COMPOSITE
21	1	17957	ADAPTER BLFC 0.25 GPM
22	1	17939	1/2 NPT X 1/2 BARB POLY ELBOW
23	1	17557	COMPOSITE BYPASS VALVE
24	1	17558	TURBINE METER ASSEMBLY WITH CABLE
25	1	17812	REFILL SHUT-OFF ASSEMBLY
26a	1	17893	C-INJECTOR #00 ASSEMBLY PURPLE
26b	1	17947	C-INJECTOR #0 ASSEMBLY RED
26c	1	18194	C-INJECTOR #1 ASSEMBLY WHITE
26d	1	19318	C-INJECTOR #2 ASSEMBLY BLUE
26e	1	19393	C-INJECTOR #3 ASSEMBLY YELLOW
27a	1	17991	1.5 DRAIN LINE FLOW CONTROL ASSEMBLY
27b	1	17992	2.0 DRAIN LINE FLOW CONTROL ASSEMBLY
27c	1	17994	3.0 DRAIN LINE FLOW CONTROL ASSEMBLY
27D	1	18286	4.0 DRAIN LINE FLOW CONTROL ASSEMBLY
28	1	18445	RISER PIPE RETAINER O-RING
29	1	19739	CHECK BALL CAGE ASSEMBLY
30	2	13329	O-RING - 014
31A	1	17941	DIFFUSER UPPER BASKET 1 X .008 RED
31b	1	18985	DIFFUSER UPPER BASKET 1 X .02 WHITE
32	1	19328	TANK RETAINER SEAL

CONTROL PARTS LIST AND EXPLODED VIEW

Item	Quantity	Part Number	Description
1	1	18265	#4 FLAT WASHER 18-8 S.S.
2	1	51919	SCREW #4-20 X 1/4IN, PHIL PAN PLASTITE
3	1	51827	RAINSOFT USA COUNTED LABEL
4	1	51902	REAR COVER GEN5 & GEN6
5	1	71611	HOLE PLUG .625 DIA HOLE
6	1	52595	TC HYBRID FRONT HOUSING PCB ASSY
6.1	1	52462	GEN6 DOOR TC
6.2	1	51907	SPRING FRONT HOUSING DOOR

Item	Quantity	Part Number	Description
7	1	72134	HEYCO SR5P4 4 LEAD
8	1	72250	HEYCO SR 4K-4 BUSHING (.500 DIA HOLE)
9	1	51921	RPS SOFTENER VALVE MOTOR ASSY
9.1	1	17501	BRINE GEAR / CAM
10	2	51918	SCREW 1/4-20 X 1IN PHIL PAN SS
11	1	51912	WIRE HARNESS 1 POWER 24 VDC
12	1	52491	GEN6 REAR HOUSING WITH INSERTS

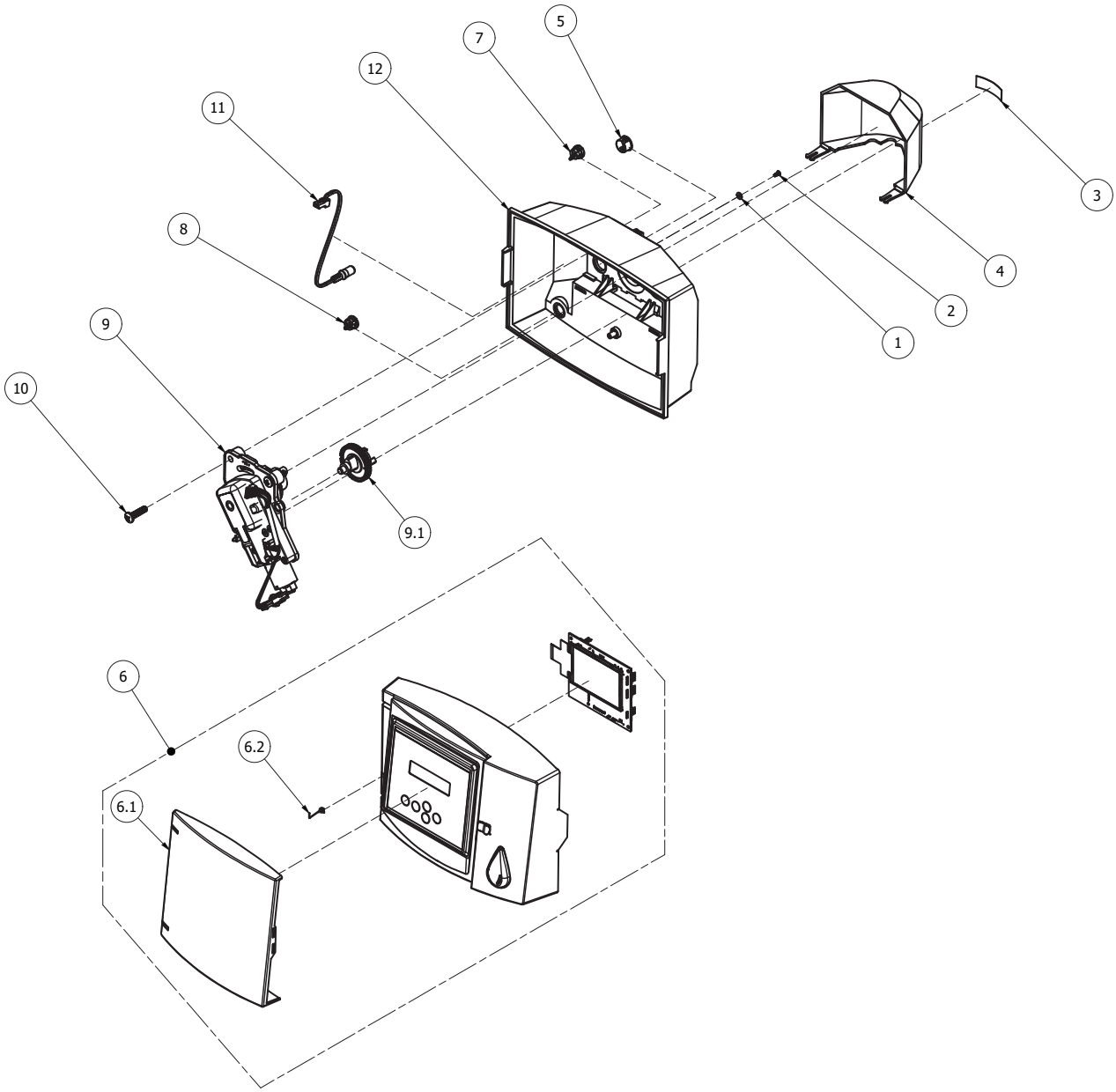

TROUBLESHOOTING GUIDE

Symptom	Cause	Solution
1. The system fails to regenerate automatically	1. The power supply is plugged into intermittent or dead power source. 2. The system is not counting gallons.	1. Connect to a constant power source. 2. Call your RainSoft Dealer for service.
2. The system regenerates at the wrong time	1. The computer is not set properly. 2. The time is off due to daylight savings. 3. The maximum system capacity has been exceeded.	1. Check and Reset the time of day/hour of time and regeneration.. 2. Reset the time of day/hour. 3. Limit water usage until the regeneration is complete.
3.Poor water quality	1. The raw water has changed. 2. The bypass valve is open. 3. The power supply is disconnected.	1. Call your RainSoft Dealer for a new water analysis. 2. Close the bypass valve. 3. Plug in the power supply.
4. Loss of water pressure	1. Low pressure to the unit.	1. Bypass the system. If the problem still exists after bypass, it is not related to a RainSoft product. (Check your water distribution system.) If the problem is resolved after bypass, call your RainSoft Dealer for service.
5. Excessive water in the brine tank and/or salty water	1. The drain line is plugged/restricted. 2. The brine valve is dirty. 3. Low inlet pressure. 4. The injector is plugged.	1. Check the water flow to the drain. Check for crimps in the drain line. Call your RainSoft Dealer for service. 2. Call your RainSoft Dealer for service. 3. Call your RainSoft Dealer for assistance. 4. Call your RainSoft Dealer for service.
6. The system fails to use salt	1. The drain line is plugged/restricted. 2. The injector is plugged. 3. Low inlet pressure. 4. No water in the brine tank.	1. Check the water flow to the drain. Check for crimps in the drain line. Call your RainSoft Dealer for service. 2. Call your RainSoft Dealer for service. 3. Call your RainSoft Dealer to increase the inlet pressure. It must be a minimum of 20 psi. 4. Call your RainSoft Dealer for service.
7. Constant flow to the drain	1. Foreign material in the valve. 2. Excessive water pressure.	1. Call your RainSoft Dealer to clean the valve. 2. Install a pressure regulator.

If the troubleshooting guide did not resolve the symptom, please contact your local RainSoft Dealer for service. If you cannot locate your local RainSoft Dealer, please contact RainSoft Customer Service at 1-800-860-7638 or logon to www.rainsoft.com for the name and location of your nearest authorized Dealer.

LIMITED LIFETIME WARRANTY

For as long as you own the equipment

RainSoft Division of Aquion, Inc. believing its

WATER TREATMENT SYSTEM

to be of exceptional quality, hereby warrants said equipment to its first purchaser at retail as follows:

The treatment tank, valve, salt container, electrical components and resins Ion-X 2000 and Ion X-100 are warranted against defects in manufacture for the lifetime of the first purchaser at retail.

This warranty begins at the time the equipment is first connected for use, and is contingent upon the return of a signed owner's registration card.

This warranty does not require replacement of the entire unit. If the equipment does not perform properly, you should request service from the dealer that sold you the equipment. If you are not satisfied, you should notify our Customer Service Manager. If we are not able to arrange local servicing, you should send the defective part(s)(or, if you prefer, send the entire unit,) directly to the manufacturer, freight prepaid, with proof of purchase and a copy of this warranty. The defective part(s)(or entire unit) will either be repaired or new RainSoft part(s) furnished, for a nominal charge to cover labor, handling, packing and the increase, if any, in the retail price of the part(s) since the date of purchase. Genuine RainSoft parts must be used. Failure to use genuine RainSoft parts will void the warranty and certifications.

This warranty does not include labor charges, and does not cover installation, transportation, or any other claims or torts. Some states do not allow the exclusion or limitation of incidental or consequential damages, so parts of the above limitation or exclusion may not apply to you.

This warranty gives you specific legal rights, and you may also have other rights which vary from state to state. You also have implied warranty rights. In the event of a problem with warranty service or performance, you may be able to go to a small claims court, a State court, or a Federal District Court.

This warranty is void if equipment is not installed and operated according to instructions. It does not apply to damage caused by abuse, accident, neglect, freezing, fire, or other abnormal conditions beyond the company's control. This warranty is void on any part from which the manufacturing date has been removed or made illegible.

Benefits will be provided by various types of RainSoft equipment when installed and operated according to the manufacturer's recommendations. Operational, maintenance and replacement requirements are essential for the product to perform as advertised. All claims are based on the best available information at the time of printing. Manufacturer makes no representations as to the suitability of this equipment for a particular application. Buyer relies entirely on the dealer's recommendations in the purchase of this equipment.

Independent RainSoft dealers may include, together with your RainSoft product, a product or component that is not manufactured by RainSoft or their parent company, Aquion, Inc. Any non-RainSoft product may be covered by the manufacturer of that product, and is not covered by the RainSoft warranty. Aquion, Inc. does not warrant that your RainSoft product and the non-RainSoft product will perform properly when used together, and assumes no liability therefore.

RainSoft Division of Aquion, Inc.
101 S. Gary Avenue
Roselle, IL 60172 USA

Valves and Equipment manufactured after May 1, 2009

RainSoft

Rainsoft, A Division of Aquion | 101 S. Gary Avenue | Roselle, Illinois 60172 | Main: 847.437.9400 | Customer Service : 800.860.7638 | rainsoft.com

All indicated Pentair trademarks and logos are property of Pentair. Third party registered and unregistered trademarks and logos are the property of their respective owners.

©2024 Pentair. All Rights Reserved.